Use & Care Guide
Dishwasher

ATAG VA9611ST

ATAG

Contents

	Page
Before doing your first wash	4
Safety	5
Child safety	6
Parts of the dishwasher	7
Technical information	7
Baskets	8
Control panel	11
Dispenser	11
Basic Course	12
Eco-dishwashing	16
Fragile dishes	17
Program description	18
Status light	19
Cleaning	20
Rinse aid	23
Salt	24
Settings	25
Fault indications	29
Troubleshooting	30
Performance information	33
Installation instructions	35
Service & guarantee	51
Quick Guide	52

Before doing your first wash

Read the directions of use
Read the directions of use before starting to use your machine, especially the Safety, Child Safety and Basic Course sections.

Take care with certain materials
Read the section ‘Fragile dishes’ before washing china with unglazed decoration or other household goods made of plastic, wood or crystal requiring careful treatment.

Safety

General

- Read and keep the directions for use!
- Installation of water, drainage and electricity must be carried out by a qualified professional.
- Do not use the dishwasher for any purposes other than those stated in this User Guide.
- Do not load the dishwasher with anything other than dishes.
- Only use dishwasher detergent!
- Place knives and other sharp objects so that they cannot cause injury to people or damage the dishwasher.
- The appliance is not intended for use by persons (including children) with reduced physical, sensory or mental capabilities, or lack of experience and knowledge, unless they have been given supervision or instruction concerning use of the appliance by a person responsible for their safety.
- Children should be supervised to ensure that they do not play with the appliance.
- Damaged mains cables must only be replaced by a qualified electrician.
- This appliance is intended to be used in household and similar applications such as:

- staff kitchen areas in shops, offices and other working environments
- farm houses
- by clients in hotels, motels and other residential type environments
- bed and breakfast type environments

Never put dishes containing solvent residue in the machine due to risk of explosion. Neither may dishes containing ashes, wax or lubricating grease be washed in the dishwasher.

Winter storage/Transport

Store the machine away from frost.
Avoid long journeys in extreme cold. Transport the machine in an upright position or lying on its back.

Overfill protection

The overfill protector starts pumping out water and closes off the water intake if the machine's water level exceeds the normal level. If the overfill protector starts up, shut off the water supply and phone for service. See 'Troubleshooting'.

Cleaning

Only use a slightly damp cloth for cleaning around the edge of the door. Do not use a spray bottle! Water can penetrate into the lock and come into contact with the electrical components.

Packaging materials

Sort at source in accordance with the recommendations of your local authority.

Scrapping

When the time comes for the machine to be scrapped, it should immediately be rendered unusable. Remove the plug and cut off the lead as short as possible.

Contact your refuse collection department or your local authority for information on the correct way to dispose of the machine!
The machine is manufactured and labelled for recycling.

Child Safety!

Child-safe button lock

To prevent children starting the machine, you can activate a button lock.
Proceed as follows:

1. Switch off the dishwasher with the main switch.
2. Hold in the Temperature and Drying buttons for 3 seconds, and at the same time switch on the main switch.

The Temperature, Drying and start symbols will then flash. Release the Temperature and Drying buttons.

4. Press the Program selection button. Once the symbol for Auto lights up, the button lock has been activated.
5. Press the Start/Stop button to store the setting.

Once the button lock has been activated, the Temperature and Drying symbols will flash when any of the buttons are pressed.

To deactivate the button lock temporarily when you want to start the machine, press the Temperature and Dry buttons simultaneously. The button lock will then automatically switch on again after 3 minutes.
To deactivate the button lock altogether, use the same procedure as for activation. When the symbol for Auto goes out, the button lock has been deactivated.

Advice!

You can read more about this in the Settings chapter.

Child-safe dishwashing

- Use the knife basket, or knife holder, for all long/sharp items.
- Always close the door and start the program immediately once dishwasher detergent has been added.
- Keep children away from the dishwasher when it is open. There might be remains of dishwasher detergent present!
- Do not allow children to use or play with the dishwasher. Always take particular care when the door is open.

Protect your children! ⚠

- Dishwasher detergent is corrosive!
Store dishwasher detergent and rinse aid out of the reach of children! Should dishwasher detergent be swallowed, immediately drink one or two glasses of milk or water. Do not attempt to induce vomiting. Contact a doctor! Should dishwasher detergent come into contact with the eyes, rinse (for at least 15 minutes) with copious amounts of water.

Parts of the dishwasher*

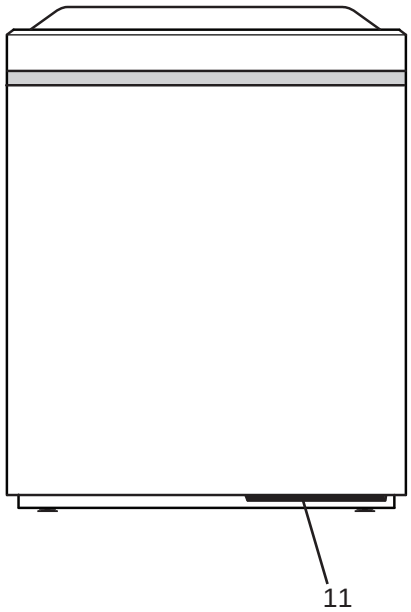

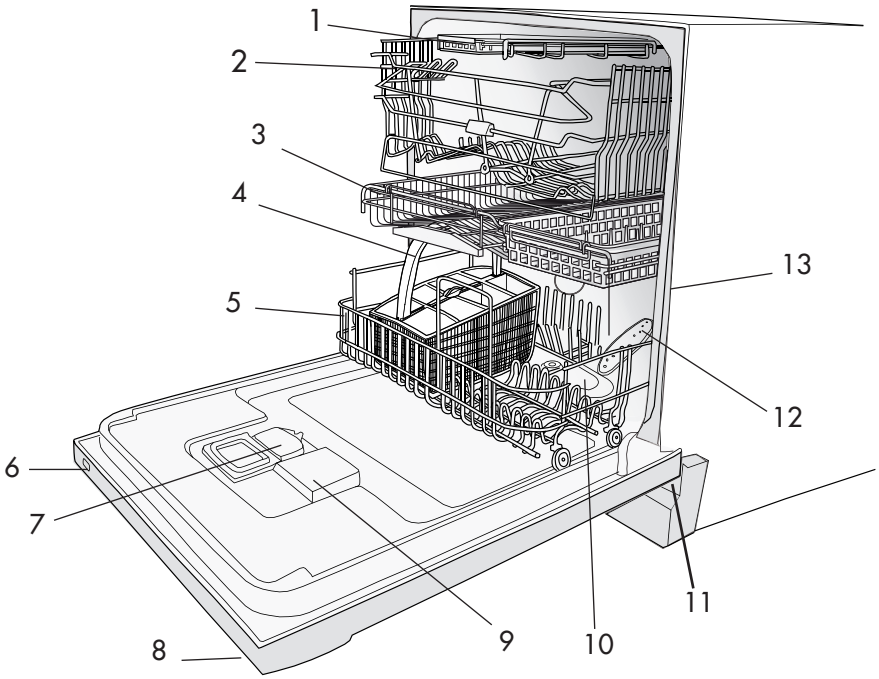

1. Knife basket
2. Upper basket
3. Middle basket
4. Cutlery basket
5. Lower basket
6. Main switch
7. Dishwasher detergent compartment
8. Program panel
9. Rinse aid dispenser
10. Filter
11. Status light
12. Spray arms
13. Type plate

*** Details may differ depending on model and market!**

Technical information

Height	860-910 mm
Width	596 mm
Depth	550 mm
Weight	48/51 kg***
Capacity*	12 place settings
Water pressure	0.03-1.0 MPa (0.3–10 kp/cm2)
Connection	1-phase, 230 V, 50Hz 10/10A**
Max	1600 W**
Accessories	

*In accordance with standard, EN50242
**See type plate.
***The weight can vary due to varying specifications.

Baskets*

Upper basket

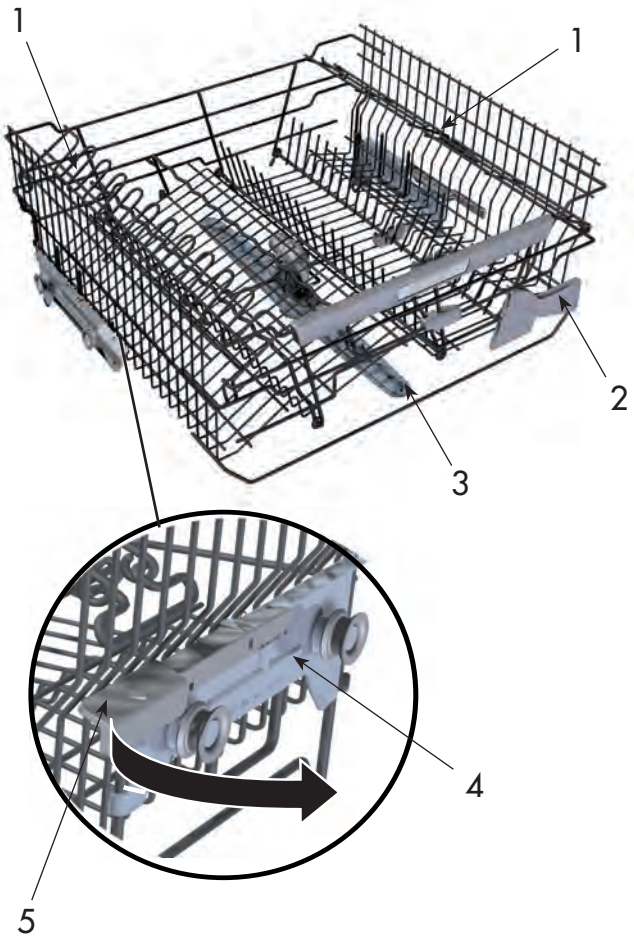

1. Wine glass shelf
2. Knife stop
3. Upper spray arm
4. Locking handle for upper basket
5. Catch

Raising/lowering the upper basket

1. Pull out the upper basket.
2. Pull out the catches (5) on either side of the upper basket and lower the upper basket at the same time.
3. Grab the basket by the sides and lift it.

Middle basket

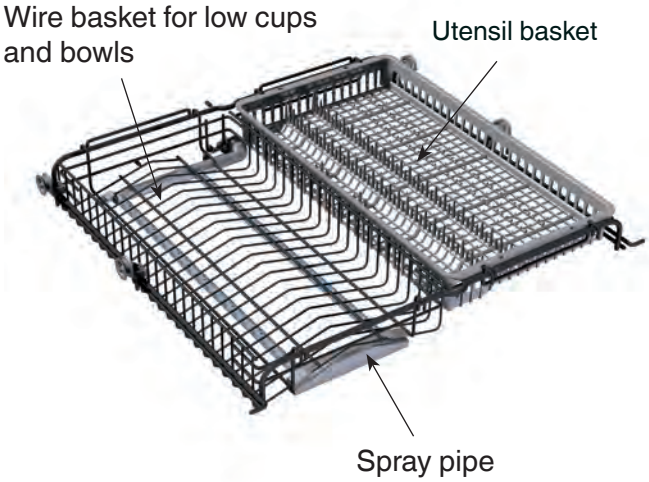

*Details may differ depending on the model and market!

Baskets*

Lower basket

Knife basket

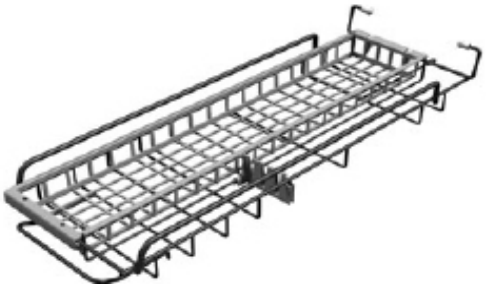

Cutlery basket

1a

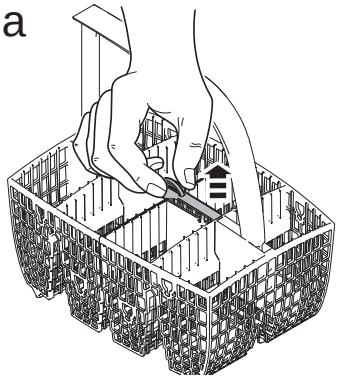

1b

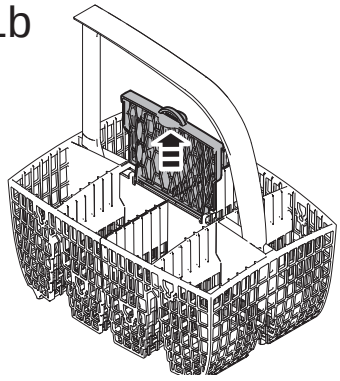

1c

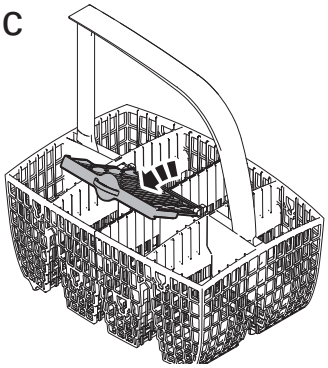

Cutlery basket with cover

2a

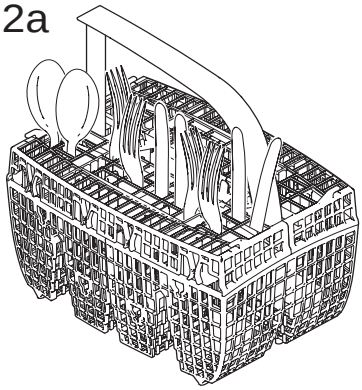

2b

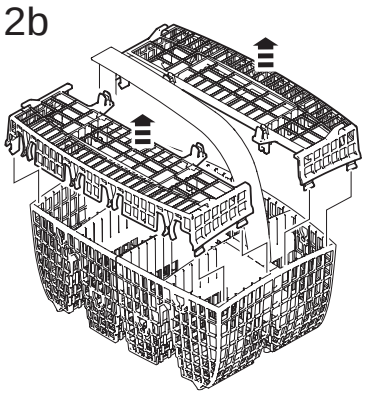

2c

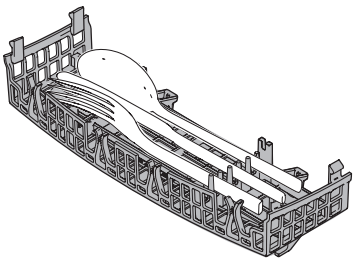

*Details may differ depending on the model and market!

Baskets*

Positioning the cutlery basket cover

The cover for the cutlery basket can be removed and used, for example, as an extra cutlery basket in the upper basket (see illustrations below).

3a

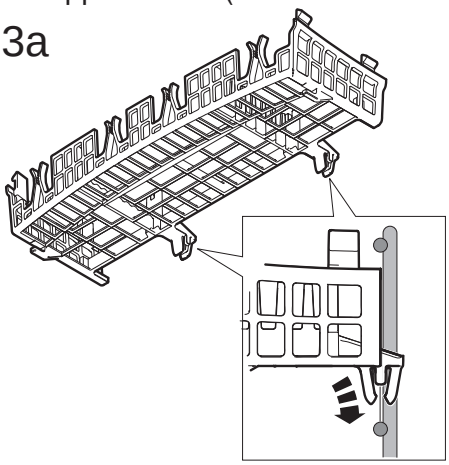

3b

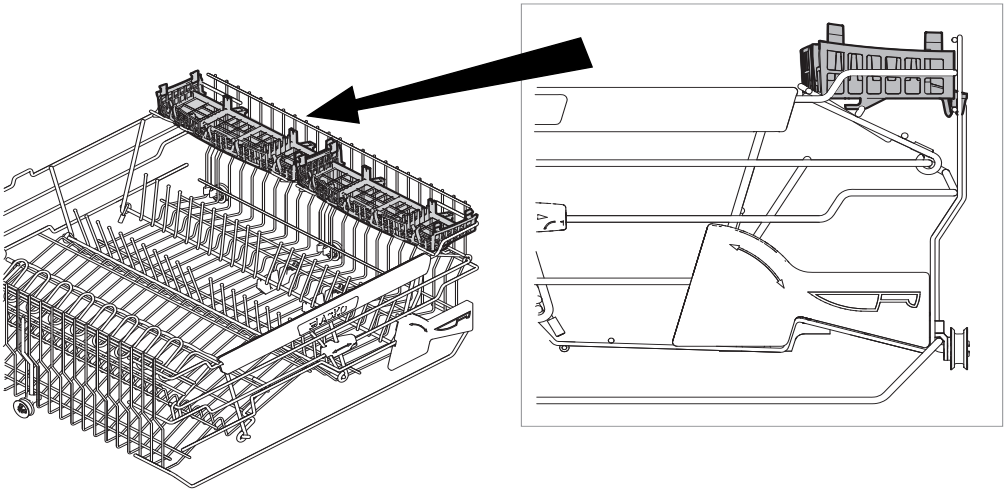

3c

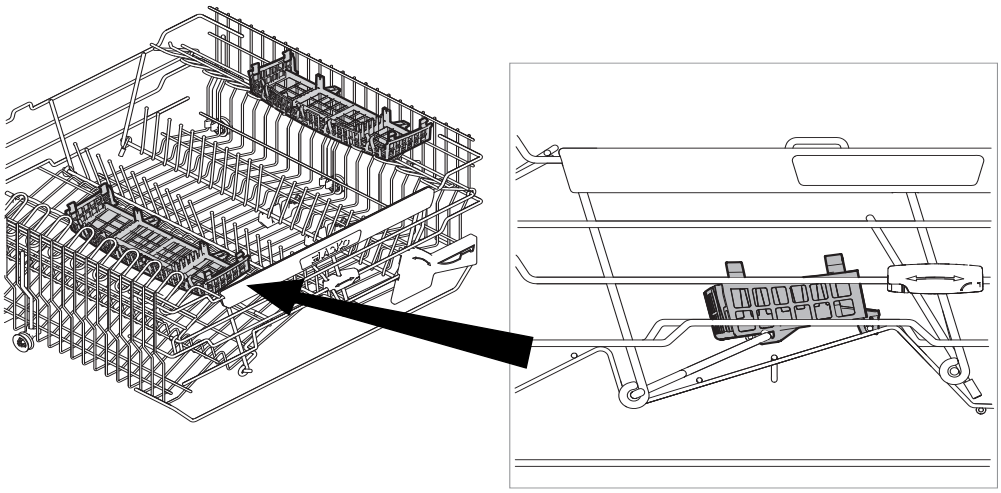

*Details may differ depending on the model and market!

Control panel

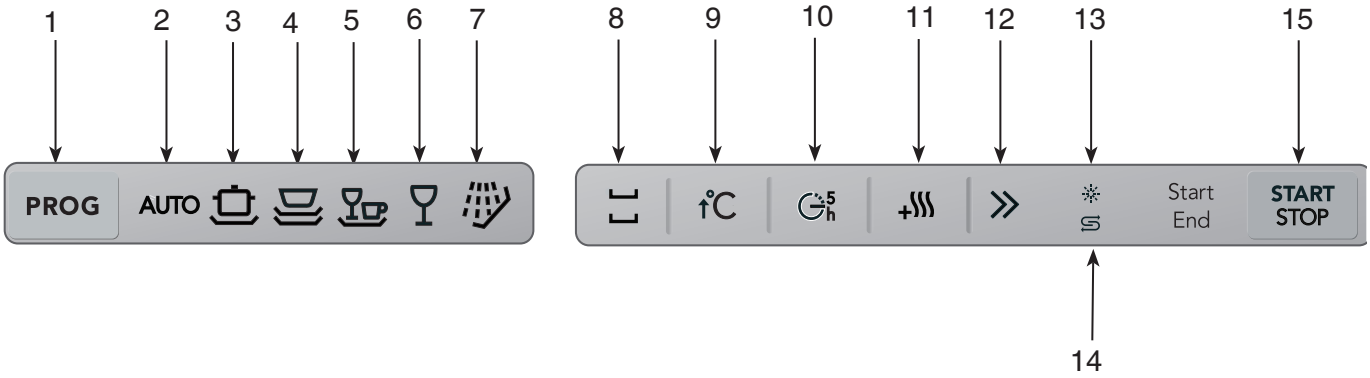

1. Program selector
2. Auto wash
3. Heavy wash
4. Normal wash
5. Delicate wash
6. Quick wash
7. Rinse & Hold
8. Whole or half load
9. Higher temperature
10. Delayed start
11. Extra dry
12. Time saver
13. Rinse aid indicator
14. Salt indicator
15. Start/stop

					AUTO Auto wash	Delicate wash	Whole or half load	Time saver
		eco			Heavy wash	Quick wash	Higher temperature	Extra dry
°C	55°	55°	40°	30°	Normal wash	Rinse & Hold	Delayed start	Salt / Gloss
°C	70°	65°	50°	60°				

Dispenser

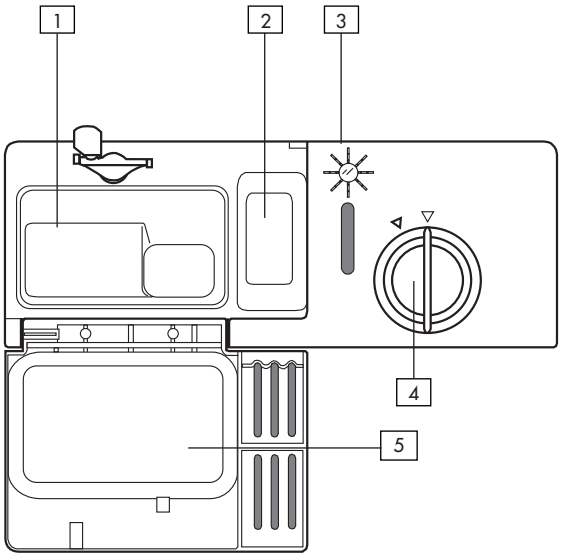

1. Compartment for main wash dishwasher detergent
2. Compartment for pre-wash detergent
3. Refill indicator rinse aid (not all models)
4. Rinse aid cover
5. Detergent compartment cover

Basic Course

SCS
SUPER CLEANING SYSTEM™

Below are step by step instructions to help you achieve the best possible dishwashing results.

1 Load the baskets correctly!

Thanks to Super Cleaning System™, you do not need to rinse the dishes under running water. Convenient and environmentally friendly! Scrape off large food particles before loading the machine.

Place glasses, cups, bowls, side plates and saucers in the upper basket, wine glasses should be placed on the wine glass shelf, and knives in the knife stand if present.

NB!
Ensure that all soiled surfaces face inwards or downwards!

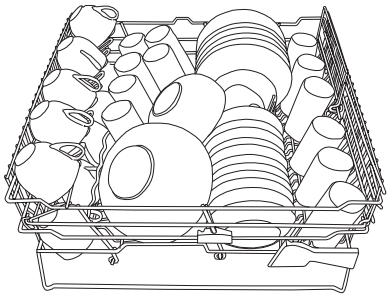

Place dinner plates, side plates, serving dishes, saucepans and cutlery (in the cutlery basket) in the lower basket.

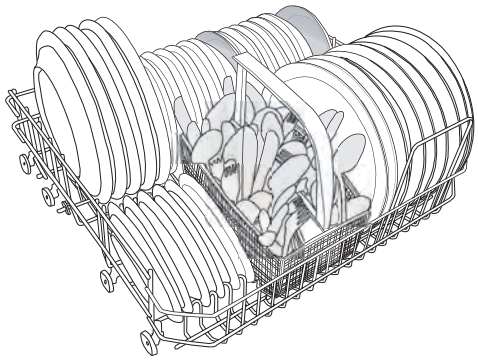

Stand the cutlery with handles downward and as spread out as possible. Ensure that spoons are not resting inside each other.

CAUTION! ⚠
Knives and other utensils with sharp points must be loaded in the basket with their points down or placed in a horizontal position.

Do not put cutlery made of different materials, e.g. silver and stainless steel, in the same compartment (risk of stains).
Check that the spray arms are able to move freely.
See Fragile dishes, if you want to wash articles that may be fragile.

2 Detergent dosage

Detergent should be dispensed in accordance with the water's hardness level.

Follow the dosage instructions on the detergent package. If your dishwasher is fitted with a water softener, dispense as for soft water.

Pour the dishwasher detergent into the dishwasher detergent compartment. There is one compartment for pre-wash and one for main wash, see Dispenser. Phone the dishwasher detergent manufacturer if you have any questions regarding the detergent.

Dishwasher tablets

Halve the tablet if it is difficult to close the dispenser cover.

3in1/ Combined detergent

NB!
Read through the directions for these products carefully. If anything is unclear, contact the dishwasher detergent manufacturer.

CAUTION!
Protect your children!
- Dishwasher detergent is corrosive!

NB!
Only use dishwasher detergent
Hand and **Clothes washing detergent** cannot be used as the build-up of foam may damage or impede the machine's performance.

Basic Course

3 Press the main power switch

4 Select program

Select a program by pressing the program selector one or more times until the required program is displayed.

AUT Auto wash

The dishwasher detects how soiled the dishes are and adjusts water consumption and temperature accordingly.
To obtain good drying result use Normal drying .

When the dishwasher is newly installed, any other 5 programmes need to be run before the Auto programme can fully adapt and provide the best results.

Heavy wash

The Heavy Wash program should be used for heavily soiled dishes, e.g. saucepans, pots and gratin dishes. If there is still space in the machine after loading such items, you can add plates et.

Normal wash

For washing dishes, such as plates, serving dishes, cups and glasses, that are normally soiled or even with dried-on food.

Use the Normal wash program with normal temperature and normal drying .
To save more water and energy use economy temperature and economy drying.

Delicate wash

If the dishes are not heavily soiled, you can select Delicate wash. This program is intended for glass and china which has just been used and therefore does not need such a powerful program.

Quick wash

Select Quick Wash if the dishes are very lightly soiled. This program is used for very lightly soiled glass and china, e.g. coffee cups.

Rinse & Hold

For rinsing the dishes while waiting for the machine to be illd.

If you wish to use additional options, continue to point 5. Otherwise you can now start the machine, see pint 6.

Basic Course

5 Select options

To select an option, press one of the option ut-tons.

Higher temperature

With the temperature option button you can select the wash temperature.

Program	Normal °C	Eco °C
Auto		
Heavy wash:	70	55
Normal wash:	65	55
Delicate wash:	50	40
Quick wash:	60	30

The temperature symbol will light up if you have chosen the **normal** temperature. This selection will remain in force until a chnge is made.

5 h Delayed start

If you want the machine to start later, press the Delayed start option button. The clock symbol on the button lights up. Then press the Start/ Stop button and the machine will start the pro-gram 5 hours later. To cancel delayed start, hold down the Start/Stop button for tree seconds.

Extra dry

If you require a better drying result, press the option button Drying to select normal drying. A symbol in the form of three wavy lines lights. If you want a program with Eco drying – press it again and the symbol will go out. The fan assists drying even if Eco dry is selected, but not in the QuickWash program.

Time saver

An option that shortens the program time but uses more water and energy to clean the dishes. Can be used with Heavy Wash and Normal Wash.

Whole or half load

Upper basket wash

If you only have cups and glasses in the upper basket which require washing, you can use this program.

Lower basket wash

When you only want to wash plates and cutlery in the lower basket you can use the lower basket wash.

Basic Course

6 Press Start/Stop

The dishwasher will now start. It manages the entire wash automatically. Ensure that the door is properly closed or the machine will not start.

Changing options

If you want to change program after having started the machine, press the Start/Stop button for three seconds. Then select a new program and then press the Start/Stop button again.

Do you want to load more dishes?

Carefully open the door; the machine will stops automatically, put in the dishes, close the door and the dishwasher will continue from where it left off.

If the machine is switched off from the main switch

(or in the event of a power cut) before the washing program has been completed, the interrupted program will continue when power comes back on.

NB!

If the power is switched off, or if the door is open for more than 2 minutes during drying, the program isinterrupted.

7 After dishwashing

Once the machine has finished, it only draws standby current. Turn off the water faucet if the machine is not to be used for an extended period, such as during vacations, for example.

Drying

For additional drying the door should be opened 35 mm upon completion of the drying cycle. For more information refer to the page marked Performance Information in these instructions.

Eco-dishwashing

Only wash with a full load
Waiting to run the wash until the machine is full saves energy.

Wash at a lower temperature
If the load is only lightly soiled, you can lower the temperature.

Select program with Eco drying
To save energy, select Economy dry. You will get a better drying result if you leave the door slightly open after the end of the program.

Do not rinse before dishwashing
You do not need to rinse the dishes before loading them into the machine. Just scrape off large food particles before loading the machine.

Choose environmentally-friendly dishwasher detergent
Read environmental declarations on the package!

Connect to cold water...
if you use oil or electricity to heat your home.

Connect to hot water...
if you use, for example, district heating, solar power or geothermal power to heat your home. Choosing a hot water connection can cut programme times and reduce the machine's electricity consumption by as much as 50%.

Fragile dishes

A number of household goods are not suitable for machine washing. There can be many reasons for this. Certain materials cannot withstand intense heat, others can be damaged by the dishwasher detergent.

Fragile decoration

China with decoration on top of the glaze (the article has a rough feel) should not be machine washed.

Crystal/ glass

Place the articles so that they do not knock together during the wash. Use the lowest possible wash temperature and the shortest possible program. Do not heat dry! Antique and very fragile items should not be machine washed.

Glass which is machine washed at high temperatures can in time develop a grey film which cannot be removed. Wash fine glass at the lowest temperature and with a low dosage of dishwasher detergent.

Silver

Silver and stainless items should not come into contact with each other as the silver can discolour.

Cutlery with glued handles

Certain types of adhesive cannot withstand machine washing. In such cases the handles can come loose.

Wood

Wooden articles should only be machine washed if they are labelled as dishwasher proof.

Aluminium

Aluminium can be dulled by machine washing. However, good quality aluminium saucepans can be machine washed, although a reduction in lustre should be expected.

Plastic

Certain types of plastic cannot withstand the high temperature generated in machine dishwashing.

To protect plastic articles

Select a program with Economy temperature and Economy drying.

Program Description

Programs	Auto	Heavy	Normal	Delicate	Quick	Rinse & Hold
	AUT					
Options	--+	--	°C+	°C	°C+	
Prewashes with SCS*	1-3	2	2	--	--	--
Mainwash ***	55-65°C	55°C	65°C	50°C	60°C	--
Number of rinses	2-3, Last rinse 60°C	3, Last rinse 60°C	2, Last rinse 70°C	2, Last rinse 50°C	2, Last rinse 60°C	1 rinse
Consumption values						
1. Wash time hot water / hours:min. **	2:00-3:00	3:15	2:35	1:55	1:00	0:04
Energy approx. kWh	1,3-1,8	1,3	1,5	0,9	1,0	0.01
2.Wash time cold water / hours:min.**	1:40-2:25	2:50	2:10	1:35	0:45	0:04
Energy approx. kWh	0,7-0,9	0,6	0,9	0,5	0,6	0.01
Water consumption (l)	13-21	19	16	10	9	3

* SCS = Super Cleaning System.
** All quoted times are approximate. Cycle time fluctuations may occur due to water temperature, water pressure, variations in voltage etc.
1. Cold water connection approx. 15°C.
2. Hot water connection approx. 60°C.
*** The listed temperatures are set as the default from the factory.

Status light

The status light at the bottom on the machine provides information by means of 3 different colours.

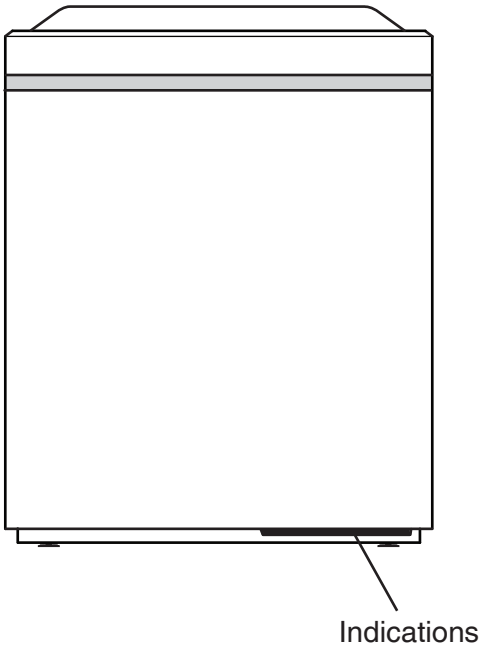

Indications

Blue
- indicates that the program has started and it is still possible to load more dishes

Red
- indicates that there is detergent in the machine and it is not recommended to load more dishes (risk of poor dishwashing result)

Flashing Red
- indicates one of the following faults:
  - water inlet fault
  - leaking valve
  - too much water in the machine
  - clogged filter

Green
- indicates the program has finished (lit for 2 hours)

See Fault indications and Trouble shooting

Cleaning

The dishwasher tub is made of stainless steel and is kept clean through normal use.However, if you have hard water, limescale deposits may form in the machine.
If this happens, run a normal wash program with two tablespoons of citric acid in the dishwasher detergent compartment.

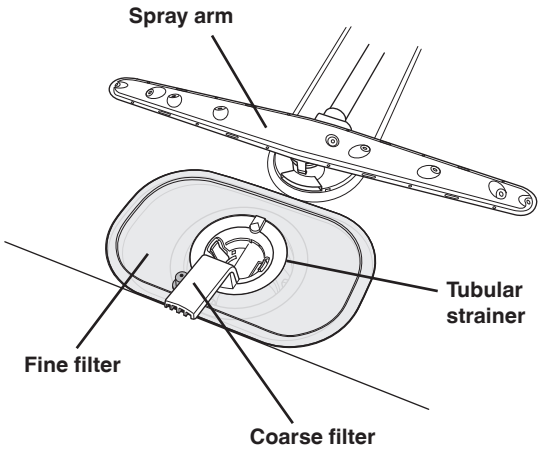

Coarse filter

The coarse filter traps larger food particles, which cannot get past the drain pump. Empty the coarse filter as necessary.

1. Lift the coarse filter by the handle.
2. Empty the coarse filter. Don't forget to replace it!

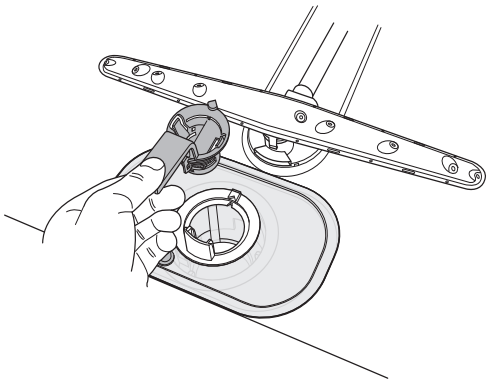

Fine filter

Debris that collects on the fine filter is auto matically rinsed away during each wash. However, the fine filter and its pipe section should be cleaned once or twice a year.

1. Turn the handle once counter-clockwise.
2. Lift the pipe section straight up by the handle. Free the coarse filter to clean the pipe section.

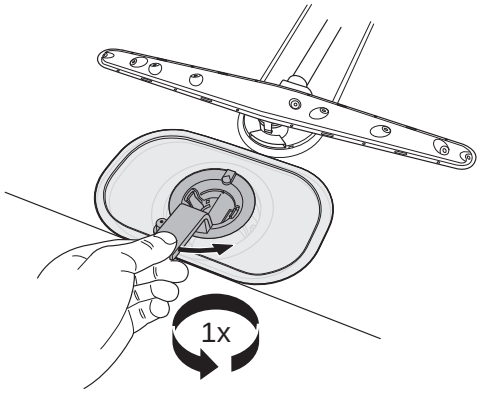

3. Remove and clean the fine filter.
4. Replace in reverse order. Ensure that the edges are properly sealed when replacing the fine filter.

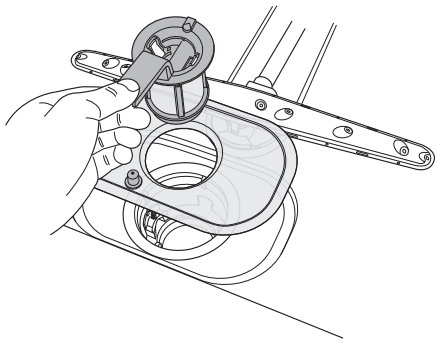

5. Lock the filter in place by turning the handle clockwise to the stop position: the handle should point out from the dishwasher.

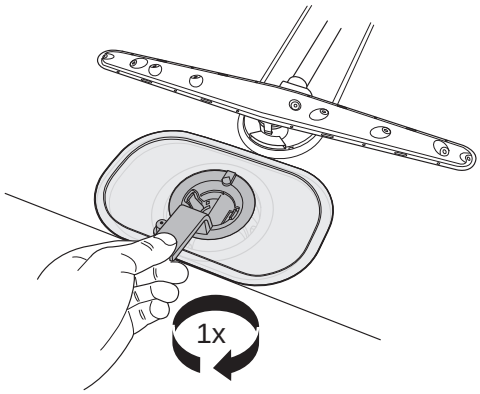

NOTE:
The dishwasher must not be used without the filter in place!
An improperly fitted coarse filter may affect the dishwashing result!

Cleaning

Drain pump

The pump can be accessed from inside the machine.

1. Cut the power to the machine by pulling out the plug! ⚠
2. Remove the coarse filter and pipe section.
3. Remove the small fitted piece at the left of the bottom drain (see the image below).

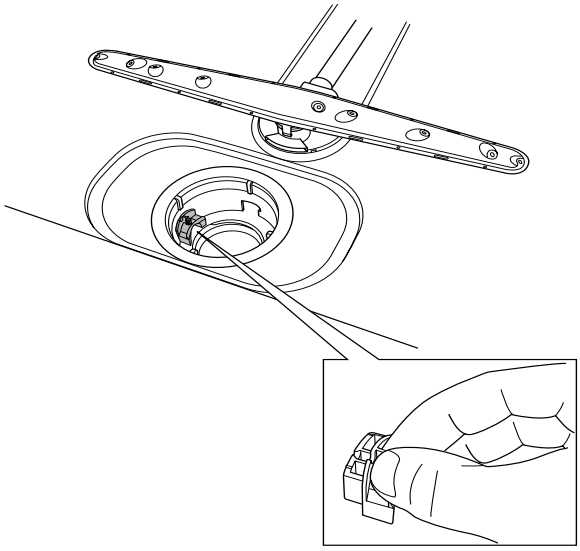

4. You can release and turn the pump blade by inserting your finger into the hole and release anything blocking it.
5. Reinstall the fitted piece and filters.
6. Plug the plug into the wall socket.

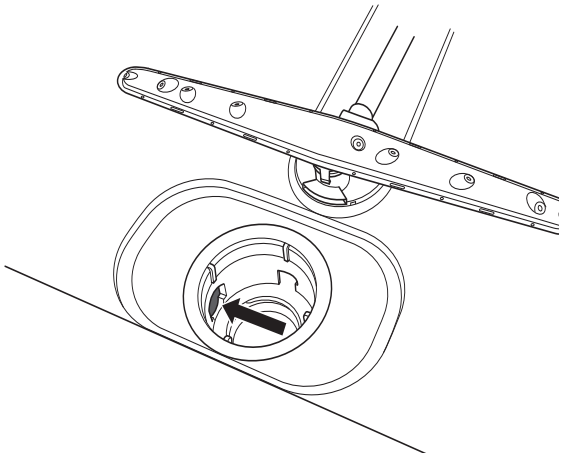

If the machine still does not start and a buzzing sound is heard, the overflow guard has been activated.

- Shut off the water.
- Pull the plug out from the wall socket.
- Call the service division.

NOTE!

Do not forget to reinstall the fitted piece.

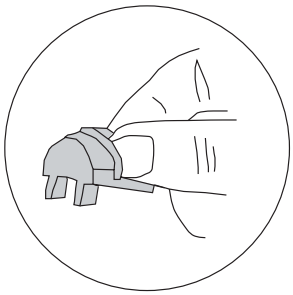

The spray arms

Holes and bearings can sometimes become blocked.

1. Pull the lower washer arm straight up to release it.
2. Remove any deposits using a needle or similar.

The washer arms also have holes under neath.

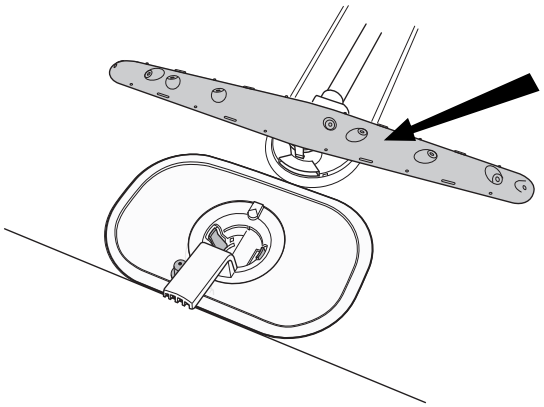

Cleaning

To release the upper spray arm, the upper basket must be removed.

1. Pull out the basket.
2. Remove the upper spray arm by unscrewing it counter-clockwise from the basket and clean it.
3. Screw the spray arm back into place.

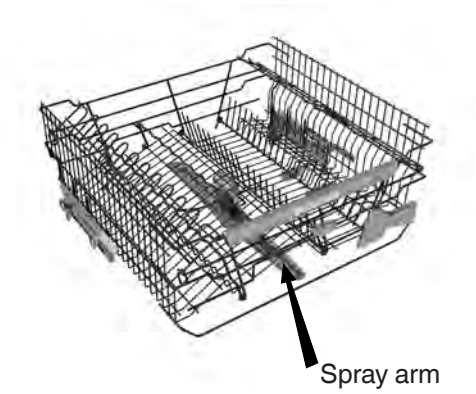

Cleaning the middle basket:

1. Pull out the basket.
2. Check the holes in the spray unit.
3. Clean with a pin or similar item.

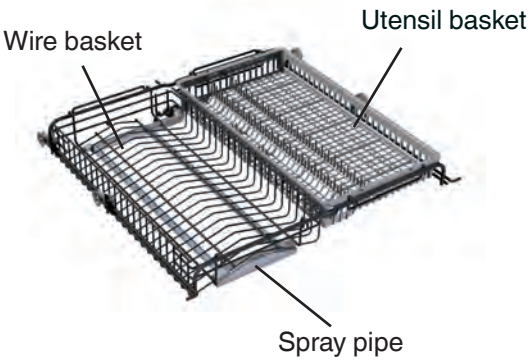

Fit the cover securely if you are not using the middle basket.

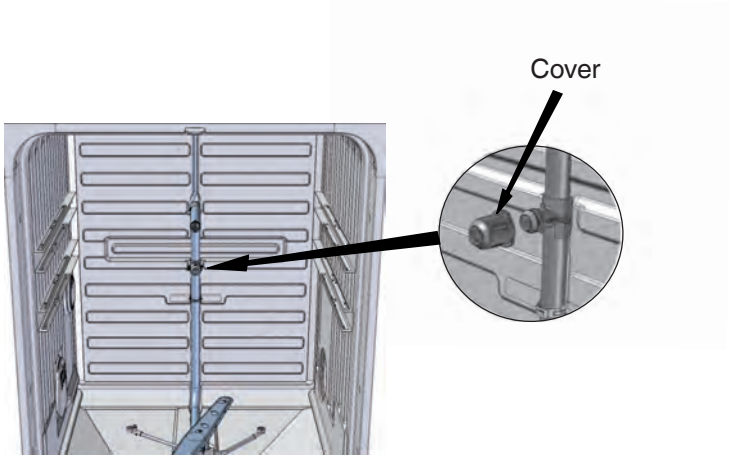

Door

When cleaning the edge around the door, use only a slightly damp cloth, possibly with a little detergent. Do not use a spray bottle or similar around the door catch. This is to ensure that water does not penetrate into the door catch and come into contact with the electrical components.

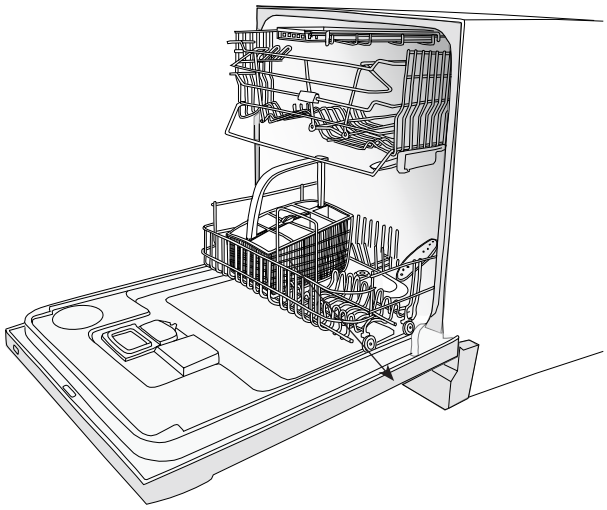

CAUTION!

Do not use a spray bottle or similar around the door catch.

Rinse aid

Pour in rinse aid

Rinse aid, helps quicken the drying process.

Machines with indicator on the panel

When the rinse aid has run out and more is needed, the rinse aid symbol on the panel lights up*.

To fill with rinse aid:

1. Turn and lift up the cover of the rinse aid compartment to the right of the dispenser. This is where you top up and set the amount of rinse aid to be dispensed in each wash.
2. Carefully pour in rinse aid up to the knob for dosage setting.

Alter dosage if required. Do not forget to close the cover.

***NB!**

After filling there may be a short delay before the signal light goes out.

Machines with refill indicator

There is a refill indicator in the middle of the dispenser (see picture). If the refill indicator is totally black, there is sufficient rinse aid. However, if the indicator has a more transparent appearance, you need to top up with rinse aid (see above).

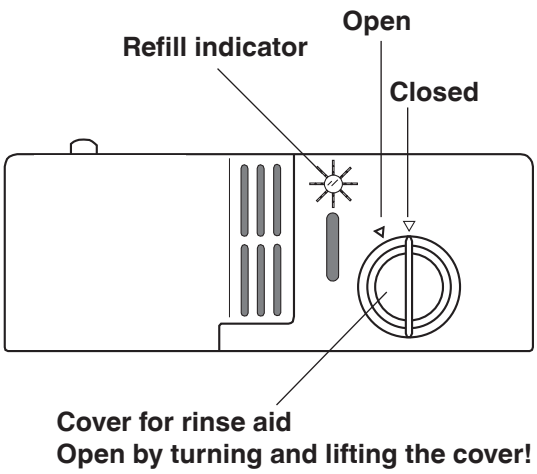

Select dosage

The dispenser is usually set at 1= soft water. However, depending on the water hardness, it may be necessary to change the dosage.

Open the rinse aid cover . Here you will find the dispenser's adjustment dial. Settings 1-6: the harder the water, the higher the dosage.
When the water hardness exceeds 10-12 °dH you should use rinse aid with citric acid (acid rinse aid) if the machine does not have a water softening filter. If the machine has a water softening filter, dispense as for soft water.

Too much rinse aid can lead to the build-up of foam. If your water is particularly soft, you can dilute the rinse aid (1 part rinse aid, 1 part water).

Too much rinse aid can cause streaks on the dishes, while too little can result in water stains.

Salt

Add salt

Before using a dishwasher with a water softening filter, you must fill the salt compartment with salt. Use coarse salt or special salt for dishwashers.
It is best to fill with salt when you are about to do a wash, as the dishwasher needs to be rinsed out immediately after filling.

Proceed as follows the first time:

1. First unscrew the cover as illustrated.
2. Place the funnel, which is supplied with the dishwasher, into the compartment's filler hole.
3. First pour in approximately 1 litre of water. Then fill the compartment with max 1.5 kg salt.
4. Wipe away excess salt so that the cover can be properly screwed into place.
5. Run a Normal wash program so that any salt in the machine is rinsed away.

When the salt runs out, the salt symbol on the display* lights up. Unscrew the cover and fill the compartment with salt. Water is only needed on the first occasion! Wipe clean and screw back in place. Run a Normal wash program so that any salt is rinsed away.

Occasionally check to see if more salt is needed. A green indicator can be seen in the cover of the salt compartment.

The indicator is not working

If the indicator is not working, this may be because the float, which is positioned under the cover, has become stuck in salt residue. The float can be reached through the green arm located under the cover of the salt compartment.
1. Move the float arm up and down to loosen it.
2. Once the float has been loosened, press it down again.

Models without a salt symbol in the display show green in the salt compartment cover when there is sufficient salt.

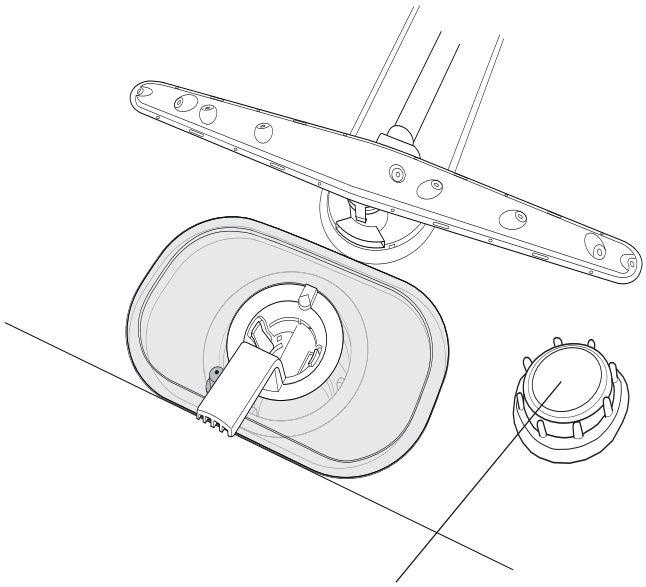

Cover for the salt compartment

***NB!**

After filling, there may be a short delay before the signal light goes out.

CAUTION! ⚠

Never pour dishwasher detergent into the salt compartment. It will destroy the water softener!

Settings

Reprogramming

Some of the machine's functions can be reprogrammed. You get into the machine's change program using the machine's ordinary buttons as per the instructions below. The selection will be retained until the next time you reset this function.
Even if the machine is turned off at the main switch or loses power for any other reason, all selections registered before the interruption of power will be retained.

Child-safe button lock

You can prevent a child starting the machine by accident or changing the settings by programming the machine with a button lock, which requires the Temperature and Drying buttons to be pressed simultaneously to start up the machine. The button lock will automatically be reactivated after three minutes.

	1.	Switch off the dishwasher with the main switch.
	2.	Hold in the Temperature and Drying buttons while pressing the main switch. The Temperature, Drying and start symbols will flash. Release the Temperature and Drying buttons.
PROG	3.	Press the Program button – when the Auto wash symbol is lit, the button lock has been activated.
START ***STOP***	4.	Then press the Start/Stop button to store the setting.

or **Reset**:

	1.	Switch off the dishwasher with the main switch.
	2.	Hold in the Temperature and Drying buttons at the same time as pressing the main switch.
PROG	3.	Press the Program button – when the Auto wash symbol goes out the button lock has been deactivated.
START ***STOP***	4.	Then press the Start/Stop button to confirm the setting.

Settings

Setting a signal

If you want the machine to signal when the wash is complete, you can program it to do this. The machine is set without a signal by default.

1. Switch off the dishwasher at the main switch.
2. Hold in the Delayed start button at the same time as you press the main switch. The button flashes. Release the button.
3. Press the Program button – when the Auto wash symbol lights, the signal is activated.
4. Press the Start/Stop button and the setting will be stored until next time you want to make a change.

or Reset

1. Switch off the dishwasher with the main switch.
2. Hold in the Delayed start button at the same time as you press the main switch. The button flashes. Release the button.
3. Press the Program button – when the Auto wash symbol goes out, the signal is deactivated.
4. Press the Start/Stop button and the setting will be stored until next time you want to make a change.

Settings

Super rinse

Super rinse means that two extra rinses will be addes at the end of the main dish. Cannot be used in the Quick wash and Rinse & Hold programs.

⏻	1.	Switch off the dishwasher with the main switch.
» + ⏻	2.	Hold in the Time server button while pressing the main switch. The Time server button and Start will flash. Release the Time server button.
PROG	3.	Press the Program button– when the Auto wash symbol is lit, the Super rinse has been activated
START ***STOP***	4.	Then press the Start/Stop button to store the setting.

or Reset:

⏻	1.	Switch off the dishwasher with the main switch.
» + ⏻	2.	Hold in the Time server button at the same time as pressing the main switch.
PROG	3.	Press the Program button – when the Auto wash symbol goes out the Super rinse has been deactivated.
START ***STOP***	4.	Then press the Start/Stop button to confirm the setting.

Settings

Setting water hardness

If you have a dishwasher with a water softener, you may need to change the setting, depending on the degree of hardness of the water. Phone your local Water Board to check the water hardness in your area. The dishwasher is set for low water hardness on delivery.

⏻	1	Switch off the dishwasher with the main switch.
START STOP +	2	Hold in the Start/Stop and Drying buttons at the same time as pressing the main switch. Release the Start/Stop button.
PROG	3	Press the Program button from one to six times depending on the hardness of the water. Program symbols will light up as you press. See illustration.

Setting water hardness						°dH	°fH
*	*	*	*	*	*	0-5	0-9
AUTO						6-8	9-14
AUTO						9-14	15-25
AUTO						15-19	26-34
AUTO						20-29	35-52
AUTO						30-44	53-79
AUTO						45+	80+

* All program indicators extinguished: Machines without water softeners and machines with water softeners and low water hardness.

START STOP	4	Press the Start/Stop button and the setting will be stored until next time you want to make a change.

Fault indications

Display		Type of fault	Action
	flashes	Too much water in the dishwasher	Phone service
	flashes	Fault with water inlet	Check that the water tap is open
	flashes	Valve leakage	Shut off the water tap and contact service
AUT	flashes	Blocked drain	See ‘Possible causes’ in chapter Trouble shooting

To remove the fault indications from the display, turn off the main switch and then turn it back on again.

Troubleshooting

Problems	Possible causes	Action
The dishes are not clean	• The spray arms are not rotating.	• Lift off the arms and clean.
	• Old dishwasher detergent. NB! Detergent is a perishable.	• Avoid large packs.
	• Incorrect dosage of detergent.	• Dispense according to the level of water hardness.
	• Insufficiently powerful dishwashing program.	• Select the Temperature normal option or switch to a more powerful program.
	• Incorrect program chosen.	• Change to a more intensive program.
	• Incorrect loading of the dishwasher.	• Do not cover china with large bowls or similar.
		•Avoid placing very tall glasses in the corners of baskets.
	• Glasses and cups have tipped over during the wash.	• Load the china securely.
Stains or a film on the china	• Dishwasher fitted with water softener is leaking salt.	• Check that the cover of the salt compartment is properly screwed on. Otherwise phone for Service.
	• Incorrectly set water softener.	• See the chapter on water softeners.
	• Incorrectly set rinse aid dispenser.	• See the chapter on rinse aid.
	• The salt compartment is empty.	• Top up with salt.
	• Phosphate-free detergent in combination with hard water.	• Change detergent.
	• Too high a temperature and/or too much detergent can cause etching on (crystal) glass. Unfortunately this cannot be remedied, only prevented!	• Wash (crystal) glass at a low temperature and dispense dishwasher detergent with care. Contact the dishwasher detergent manufacturer.
The china has a whitish-blue sticky film	• Too high dosage of rinse aid.	• Reduce dosage. See the chapter on rinse aid. If the water is very soft, you could try diluting the rinse aid (1 part rinse aid, 1 part water).

Troubleshooting

Problems	Possible causes	Action
Stains on stainless steel or silver	• Certain food remnants such as mustard, mayonnaise, lemon, vinegar, salt and dressings can cause stains on stainless steel if allowed to remain for any length of time. All stainless steel can mark silver if allowed to come into contact during the dish-washing process. Aluminium can also cause stains on dishes.	• Rinse off food residue of this type if you do not intend to start the dishwasher immediately. • Seperate your cutlery into the various compartments in the basket. Make sure silver and stainless steel are not together.
Stains which remain after dishwashing	• Lipstick and tea can be difficult to remove.	• Change to a detergent with bleach.
Rattling sound during dishwashing	• The dishes are not properly loaded or the spray arms are not rotating.	• Check that the china is loaded securely. Spin the spray arms to make sure that they rotate.
The machine will not start	• You have forgotten to switch on the main switch.	• Check
	• The door is not properly closed.	• Check
	• A fuse has blown.	• Check
	• The plug is not plugged in.	• Check
To restart the machine, press Start/stop for 3 seconds. Now select a new programme and press Start/stop.	• The water tap is off.	• Check
	• Overfilling/leakage	
	• A droning sound (drainage pump) can be heard from the machine, this does not stop when the power is switched off using the main power switch.	1. Close the water tap. 2. Pull out the plug. 3. Call a service engineer

Troubleshooting

Problems	Possible causes	Action
Water remains in the machine	• Obstruction in the drain hose.	• Disconnect the drain hose where it is connected to the sink's water trap. Check that no debris has become stuck. Is the cone-shaped part of the pipe cut so that the diameter is at least 16 mm?
	• Kinks in the drain hose.	• Check that the hose is free from kinks or sharp bends.
	• The filters are clogged.	• Clean out the coarse filter, the fine filter and the filter.
	• Items in the drain pump.	• Clean out the drain pump. See chapter on cleaning
Bad odor in the machine	• Dirt along the strips and in corners	• Clean with a dish brush and low-lather detergent.
	• Low-temperature programs have been selected for a prolonged period.	• Run a Normal Temperature program around once a month.
The dishes are not sufficiently dry	• Drying power too low.	• Activate the Normal drying option (not all models).
	The machine is not fully loaded.	Put a full load in the machine.
	• The rinse aid has run out or the set dose is too low.	• Replenish rinse aid or increase the dose of rinse aid if required.
		• Open the door slightly once the program has finished.

Performance information

Test dosage

Normal wash

Main wash 5+25 gram Standard detergent. Rinse aid dosage 3.

Energy labelling

Europa: EN50242
Dishwasher program:
Normal wash, 55°C, Economy drying.
Program time: 2:50 hours:minutesr
Connection: Cold water

Test method noise measurement: IEC-704-3

Loading of performance test

Upper basket EN50242

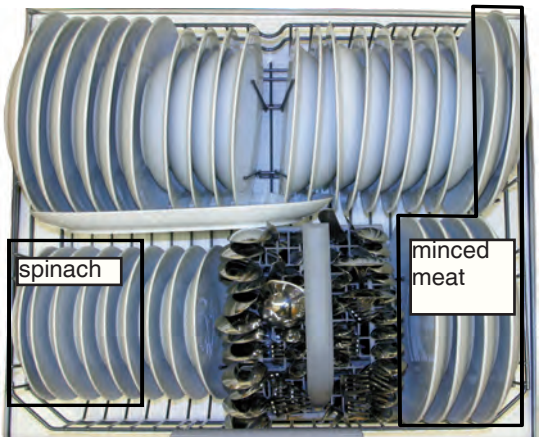

Lower basket EN50242

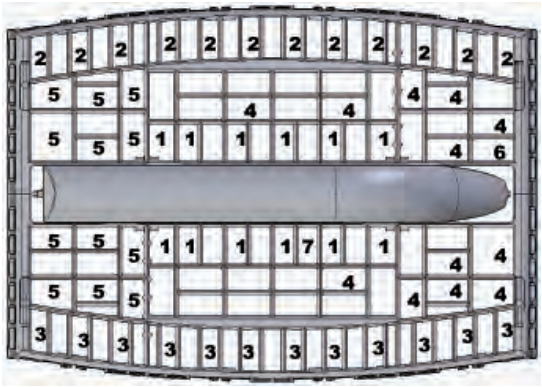

Cutlery basket EN50242
1.Teaspoons
2. Dessertspoons
3. Soupspoons
4. Forks
5. Knives
6. Serving cutlery - fork
7. Serving cutlery – gravy ladle

Performance information

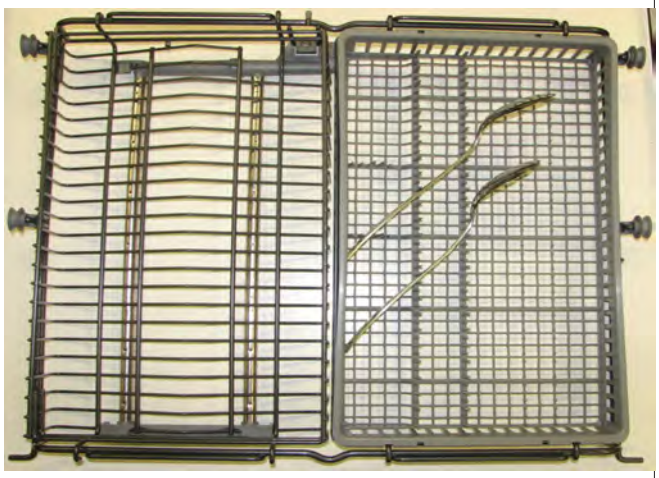

Utensil baskets EN50242

Technical data

Height	860-910 mm
Width	596 mm
Depth	550 mm
Weight	48 kg/51 kg
Capacity*	12 place settings
Water pressure	0.03-1.0 MPa (0.3–10 kp/cm^2)
Connection	1-phase, 230 V, 50Hz 10/10A**
Max	1600 W**

*In accordance with standard, EN 50242
**See type plate.

Installation

SAFETY INSTRUCTIONS:

1. It is important that you closely follow the instructions provided here.
2. An incorrect or defective installation can lead to higher consumption of energy, water and dishwashing detergent, which can lead to higher costs and poorer cleaning results.
3. Plumbing and electrical installations must be carried out by qualified professionals.
4. Exercise caution during the installation! Wear protective gloves! Always work in pairs!
5. The power socket must be fitted outside the cavity for the dishwasher to enable easy access after installing the machine.
6. Always follow the applicable regulations for water, drain and electrical connection.
7. A dishwasher fitted with a wired plug must be connected to an earthed socket.

Caution!

Turn off the water supply when installing the dishwasher!

BEFORE STARTING THE INSTALLATION:

1. *Connection to water supply:*

- There must be a shut off valve on the water supply pipe. The shut off valve should be installed in a location that is easily accessible so that the water may be shut off in the event that the dishwasher needs to be moved.

2. *Installation advice:*

- Cable holes for wires/cables need not be larger than 40 mm.
- Do not attach the plastic feet if the installation space is of minimum height.

Note:

Check that the fitting and connection measurements are correct.

Installation

DRAINAGE

Connect drain hose

The drain hose runs to an inlet plug on the ink unit's water trap.

Note:!

The hose must be fastened on a level with the underside of the sink unit.

Cut the drain hose adapter to the appropriate size for connection to the undersink drain or garbage disposer. The overall length of the drainage hose must not exceed 4,5 m.
No part of the drainage hose may be more than 950 mm above the bottom of the dishwasher.
The hose must not be run directly to the floor drain or similar.
The hose must always discharge at least 350 mm above the bottom of the dishwasher.

- The supplied cone-shaped connection pipe fits a drainage connection with an internal diameter of 13, 16, 18 and 22 mm.

- Use a hose clamp if connecting to a fixed drain (sink).

The connector is ready to cut to the desired drain connection size. Only a clamp is required.

WATER CONNECTION

Connect water supply hose

ConnecUse the supplied O ring and tighten the connection by hand plus a quarter turn with a wrench. Open the shutoff valve and let the pressure settle for a while. Check the connections again to make sure they are not leaking.
Only use the inlet hose supplied with the machine. Do not reuse old or other loose inlet hoses

- **Connect to hot or cold water?**
  If you use oil or electricity to heat your home:
  Connect the dishwasher to the cold water supply.
  If, on the other hand, you use district heating, solar power or geothermal power:
  Connect the dishwasher to the hot water supply (max. 70°C).

- The inlet pipe has a connector with either a 3/4" internal thread.

ELECTRICAL CONNECTION

- 220-230VAC mains voltage, minimum 10A

Only use the inlet hose supplied with the machine. Do not reuse old or other loose inlet hoses.

CABLE/HOSE LENGTHS

Drainage hose:	1930 mm
Supply hose:	1670 mm
Power cable:	1770 mm

Installation

Adjustment of Status light

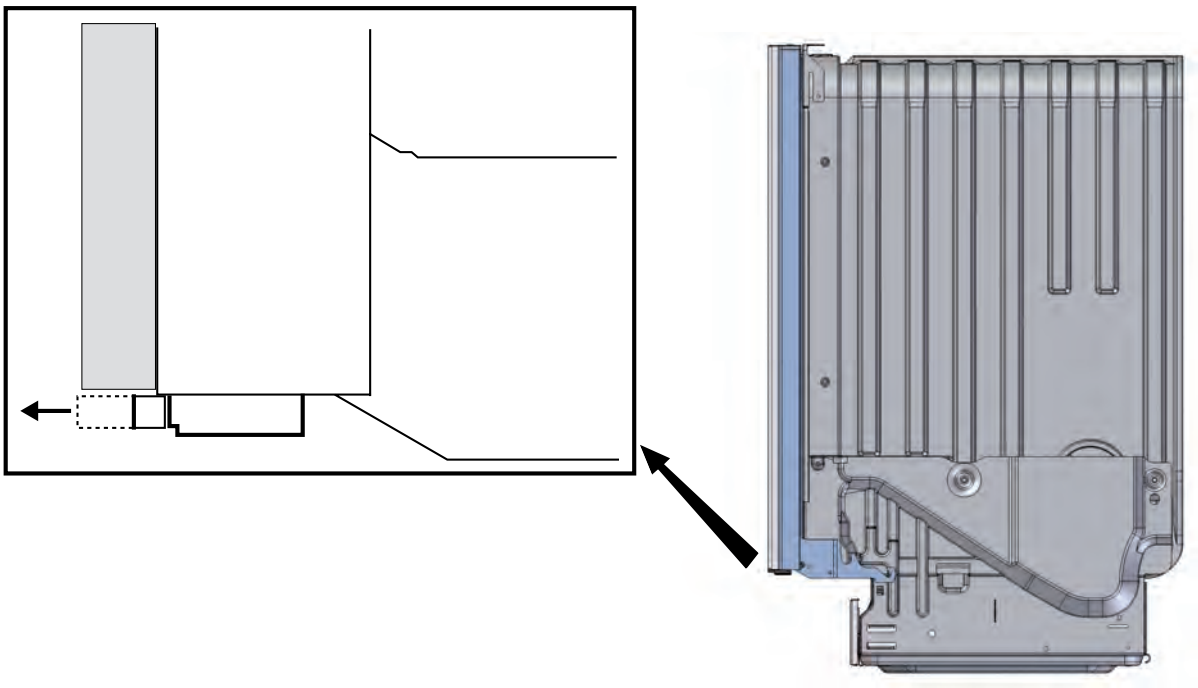

Service & guarantee

Service

Before calling for service, check to see whether the faults is due to something that you can rectify yourself.
See Trouble shooting.

Guarantee

For guarantee details, see the guarantee card.

Own comments

Own comments

Quick Guide

1. Loading baskets
Scrape off large food particleas before loading the machine.

2. Dispensing dishwasher detergent
The detergent compartment has a small compartment for pre-wash and one for main wash.

3. Ensure that the spray arms can rotate freely

4. Turn on the main switch

5. Select program and press start
For washing normally soiled dishes use the **Normal wash program** with **temperature** and **drying**.
To save more water and energy use economy temperature and economy drying.

6. Close the door

Mini Program Guide

Programs	Auto	Heavy	Normal	Delicate	Quick	Rinse & Hold
	AUT					
Options	--	--				
Prewashes with SCS	1-3	2	2	--	--	--
Mainwash	55-65°C	55°C	65°C	50°C	60°C	--
Number of rinses	2-3, Last rinse 60°C	3, Last rinse 60°C	2, Last rinse 70°C	2, Last rinse 50°C	2, Last rinse 60°C	1 rinse

Art. No: 80 881 98. Rev. 03 • We reserve the right to make changes. Disclaimer! Not all models contain all the features listed in this manual.
Printed on environmentally-friendly paper which meets the demands of Friends of the Earth and the Swedish Society for Nature Conservation.