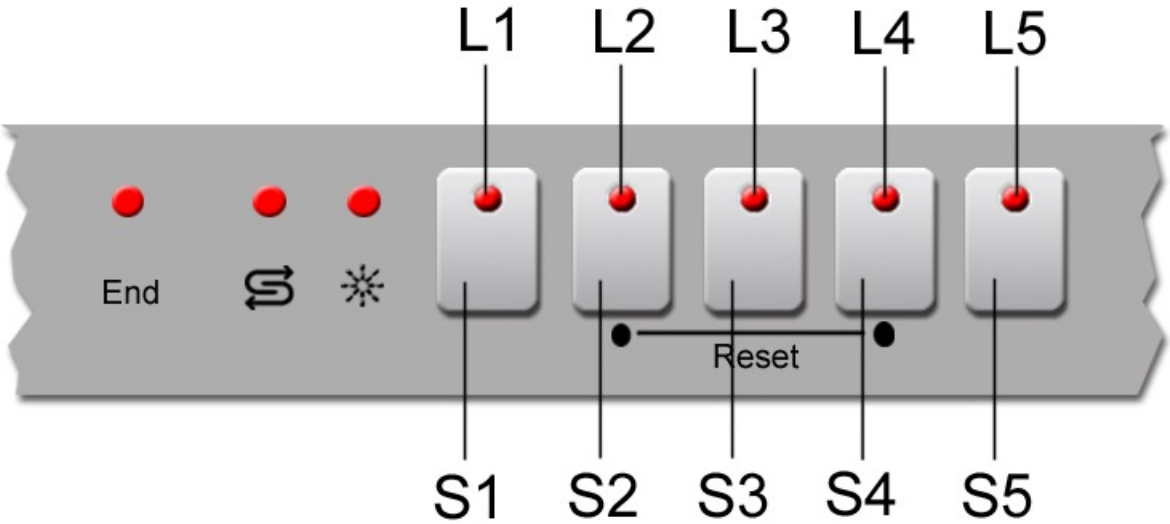
L1
L2
L3
L4
L5
End
Reset
S1
S2
S3
S4
S5