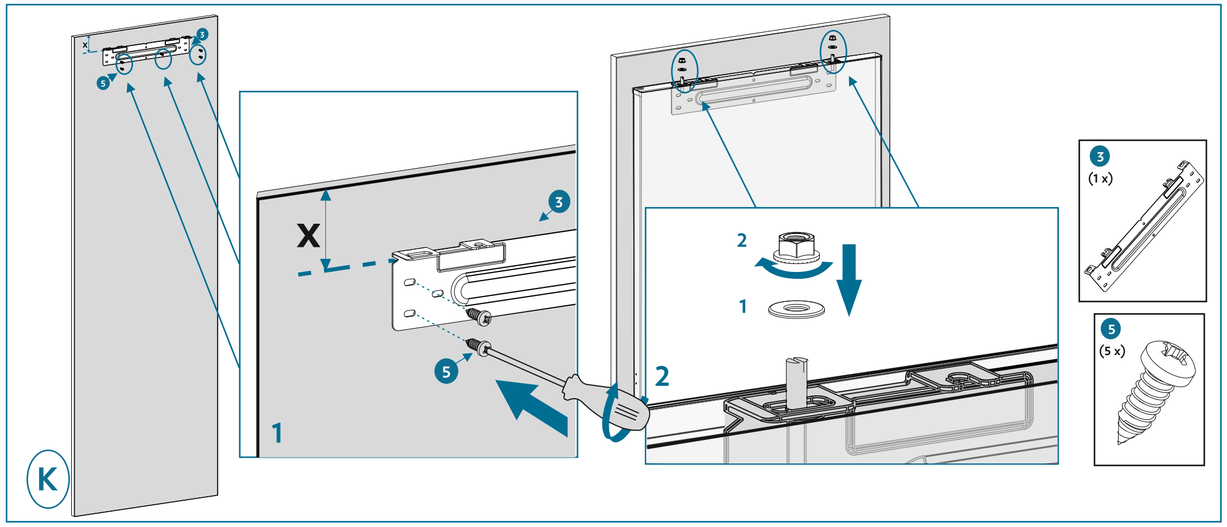

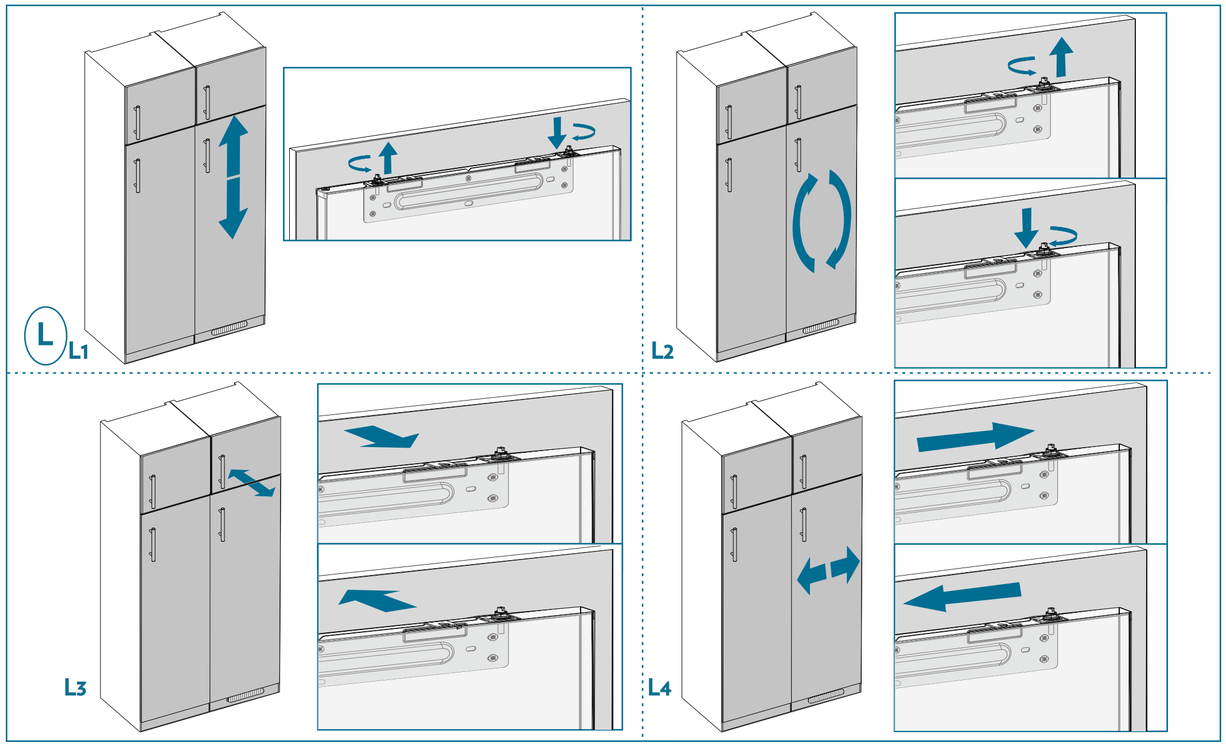

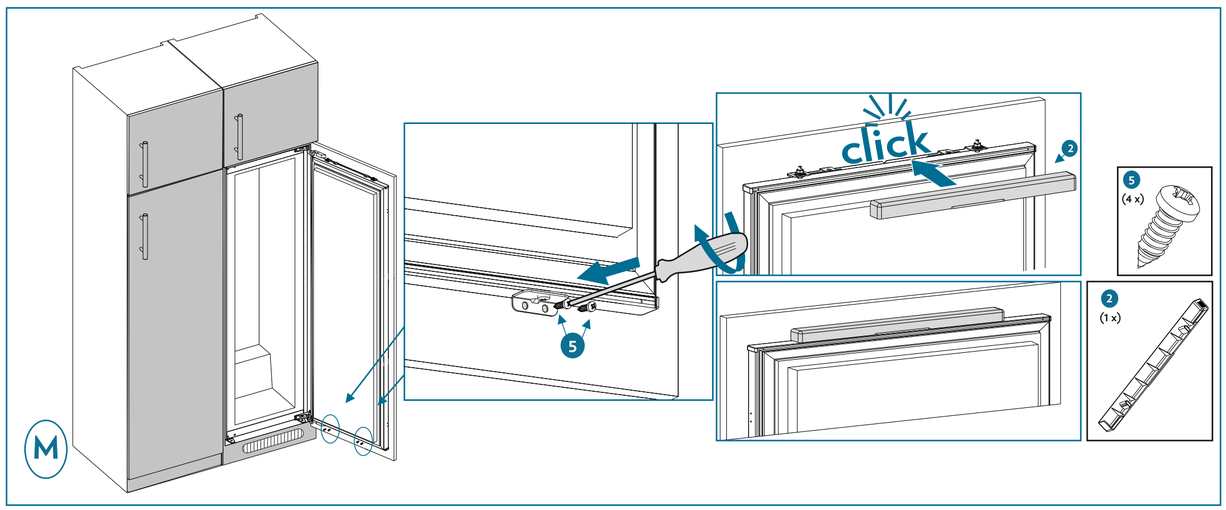

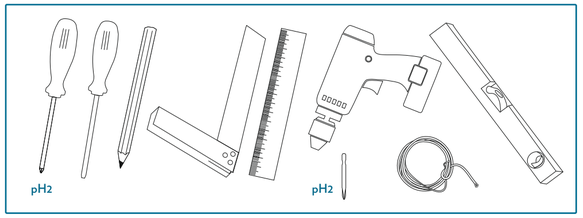

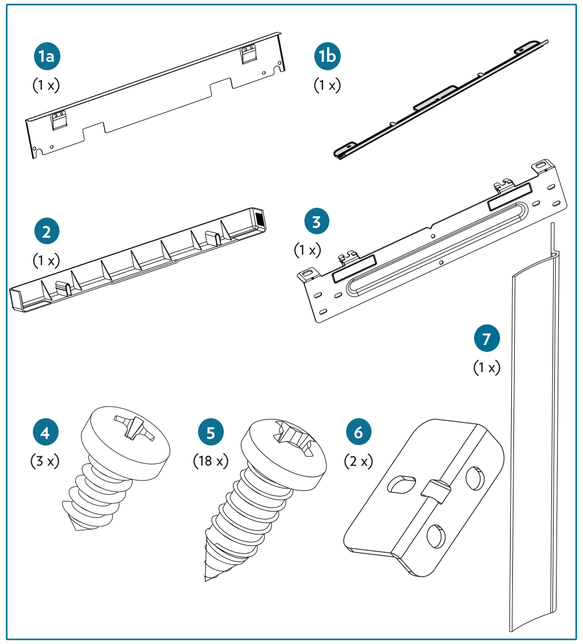

52475267

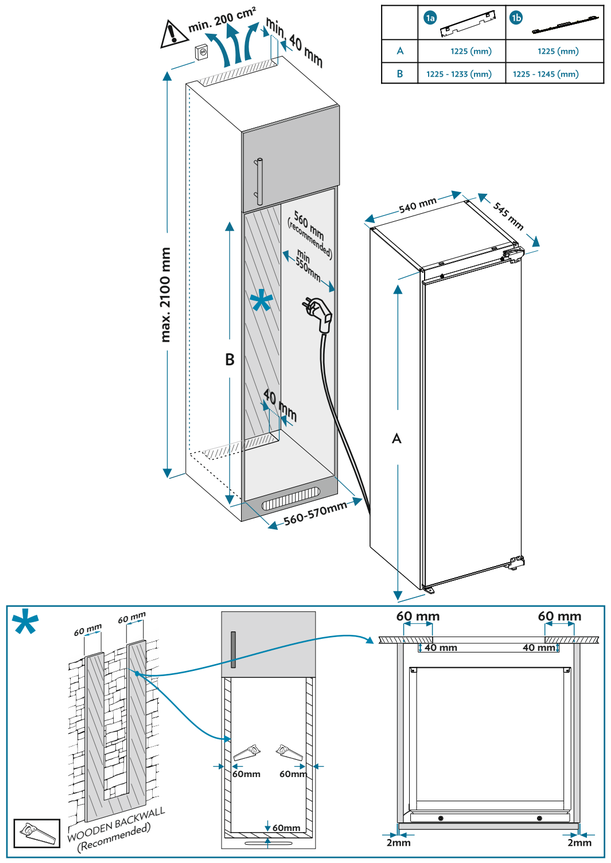

	1a	1b
A	1225 (mm)	1225 (mm)
B	1225 - 1233 (mm)	1225 - 1245 (mm)

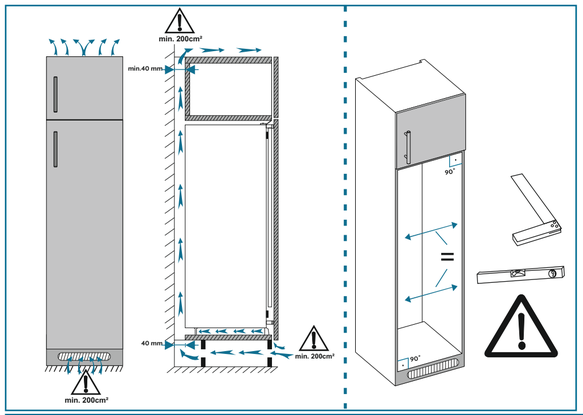

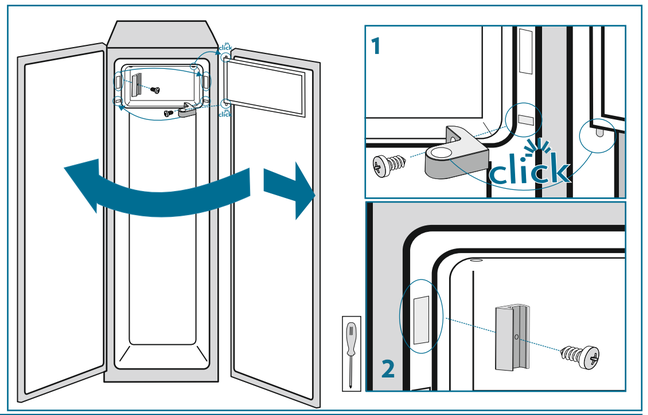

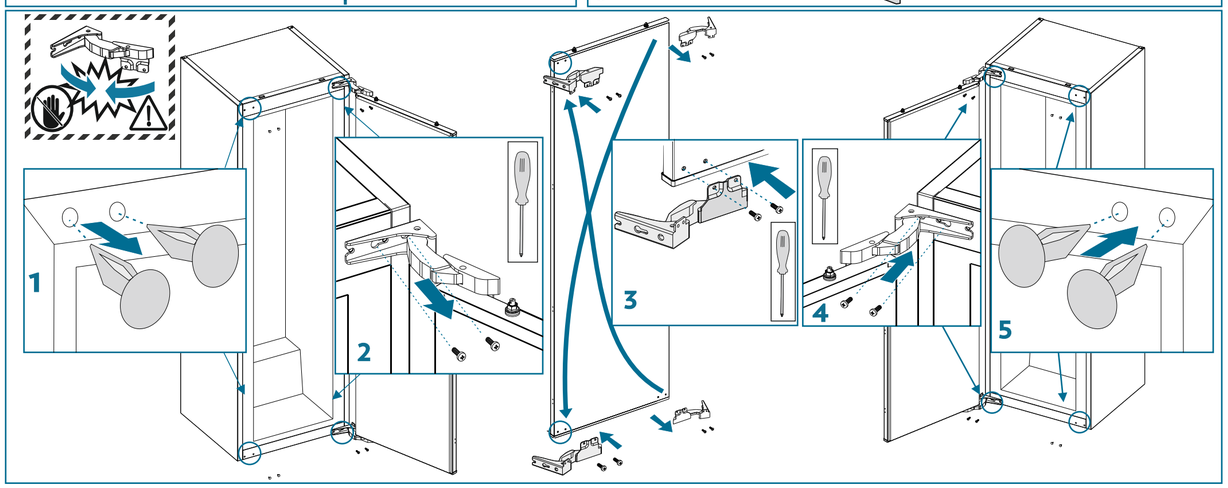

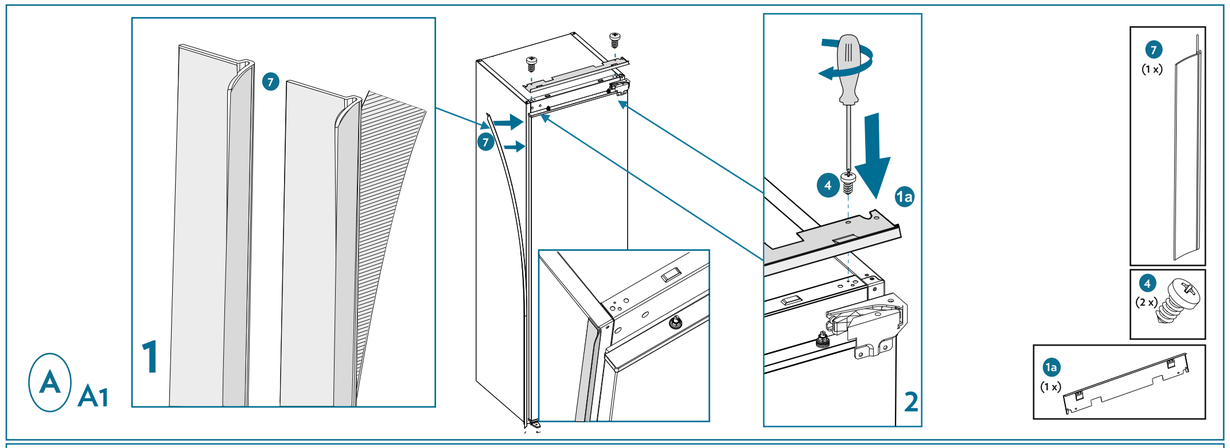
A
A1
1
2
7
4
1a
(1 x)
(2 x)

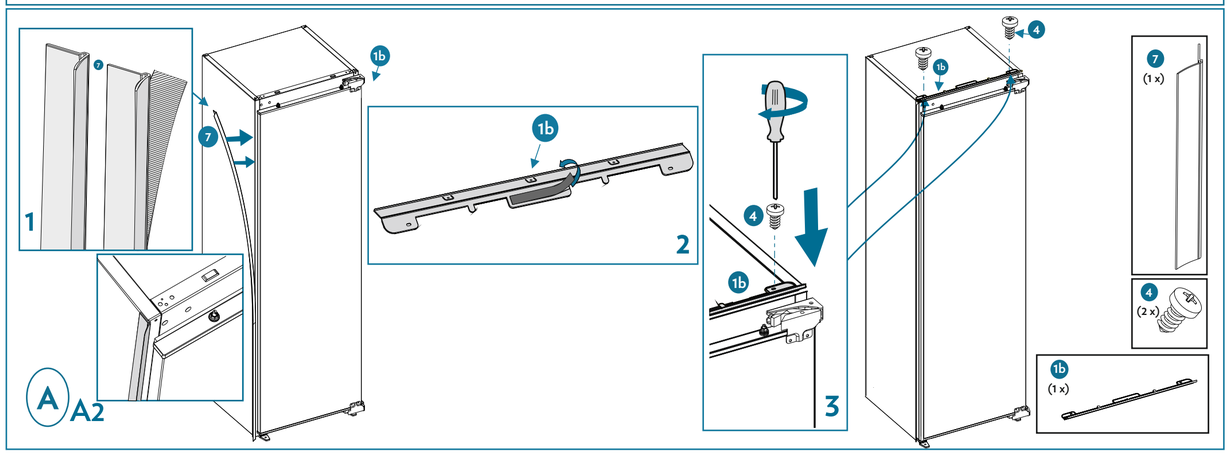
A
A2
1
2
3
7
1b
4
(1 x)
(2 x)

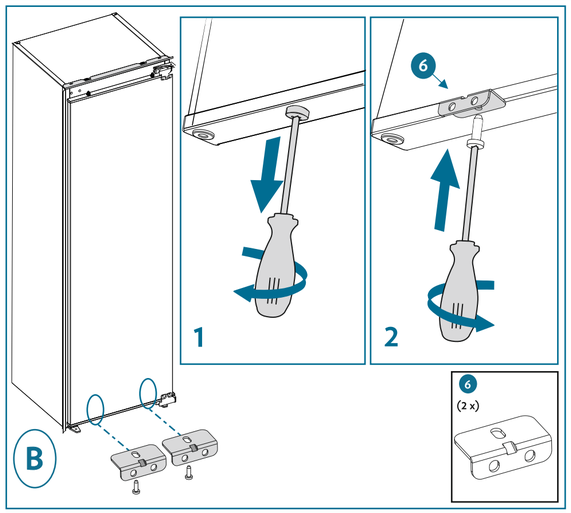
B
1
2
6
(2 x)

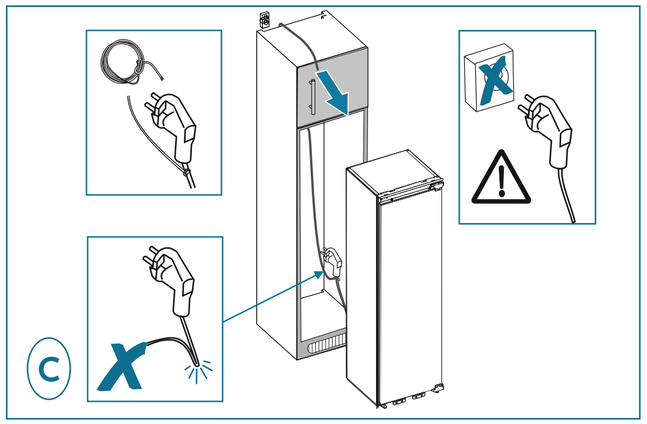
C

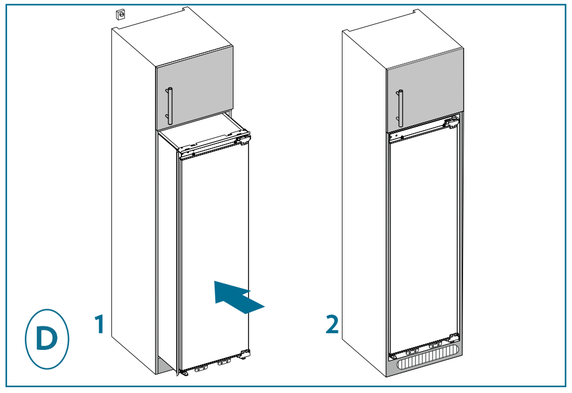
D
1
2

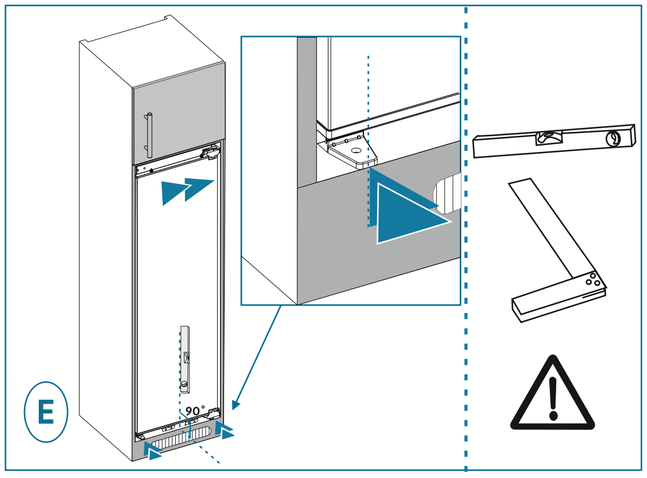
E
90°

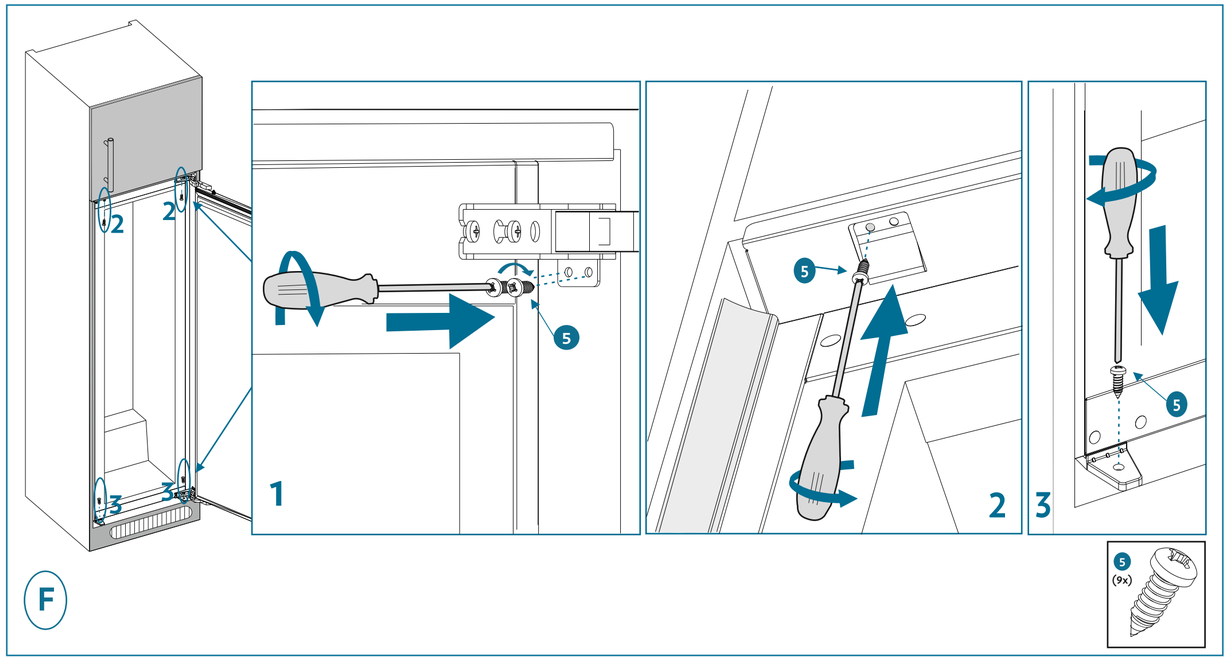
F
1
2
3
5
(9x)

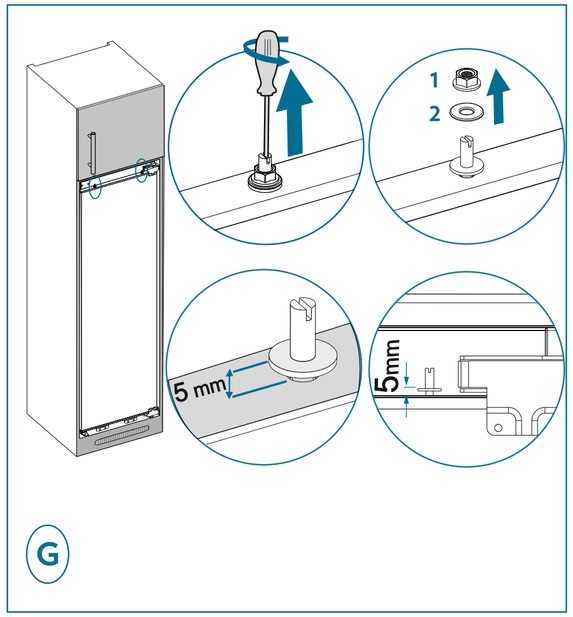
G
1
2
5 mm
5mm

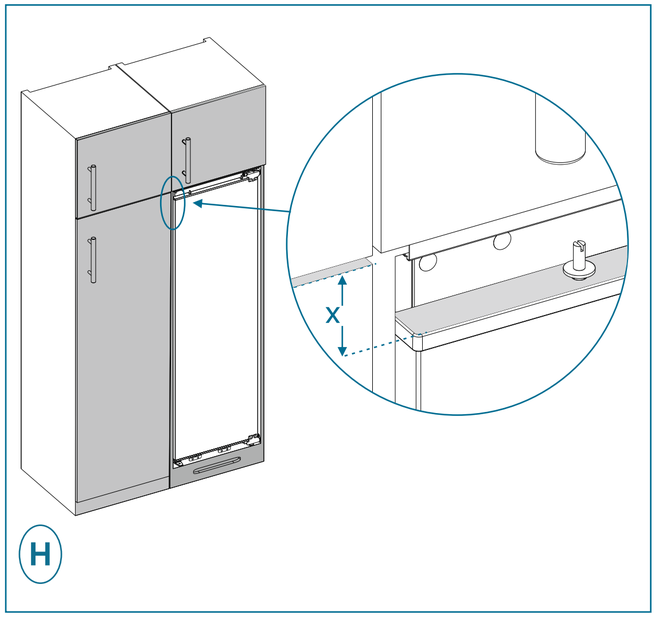
H
X

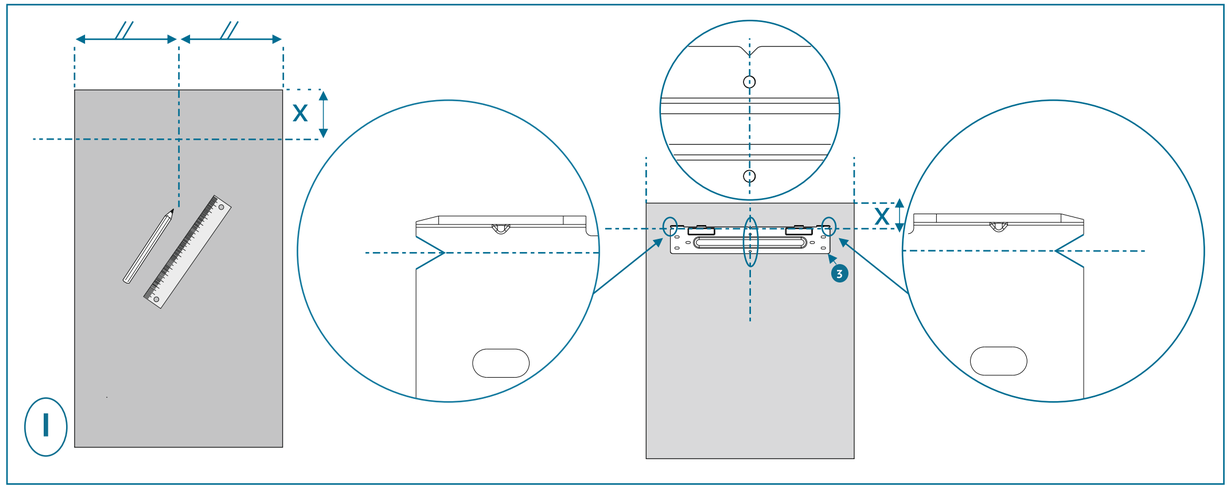
I
X
X
3