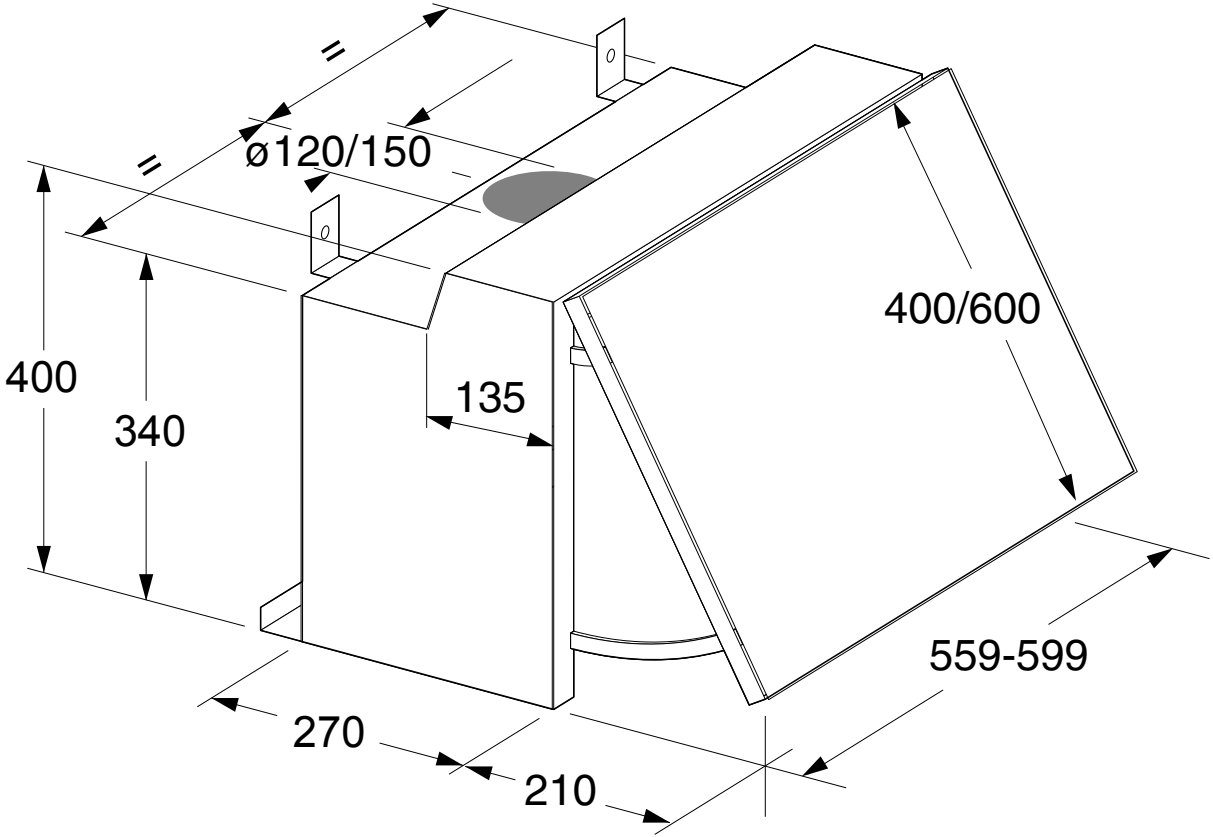
=
=
ø120/150
400
340
135
400/600
559-599
270
210