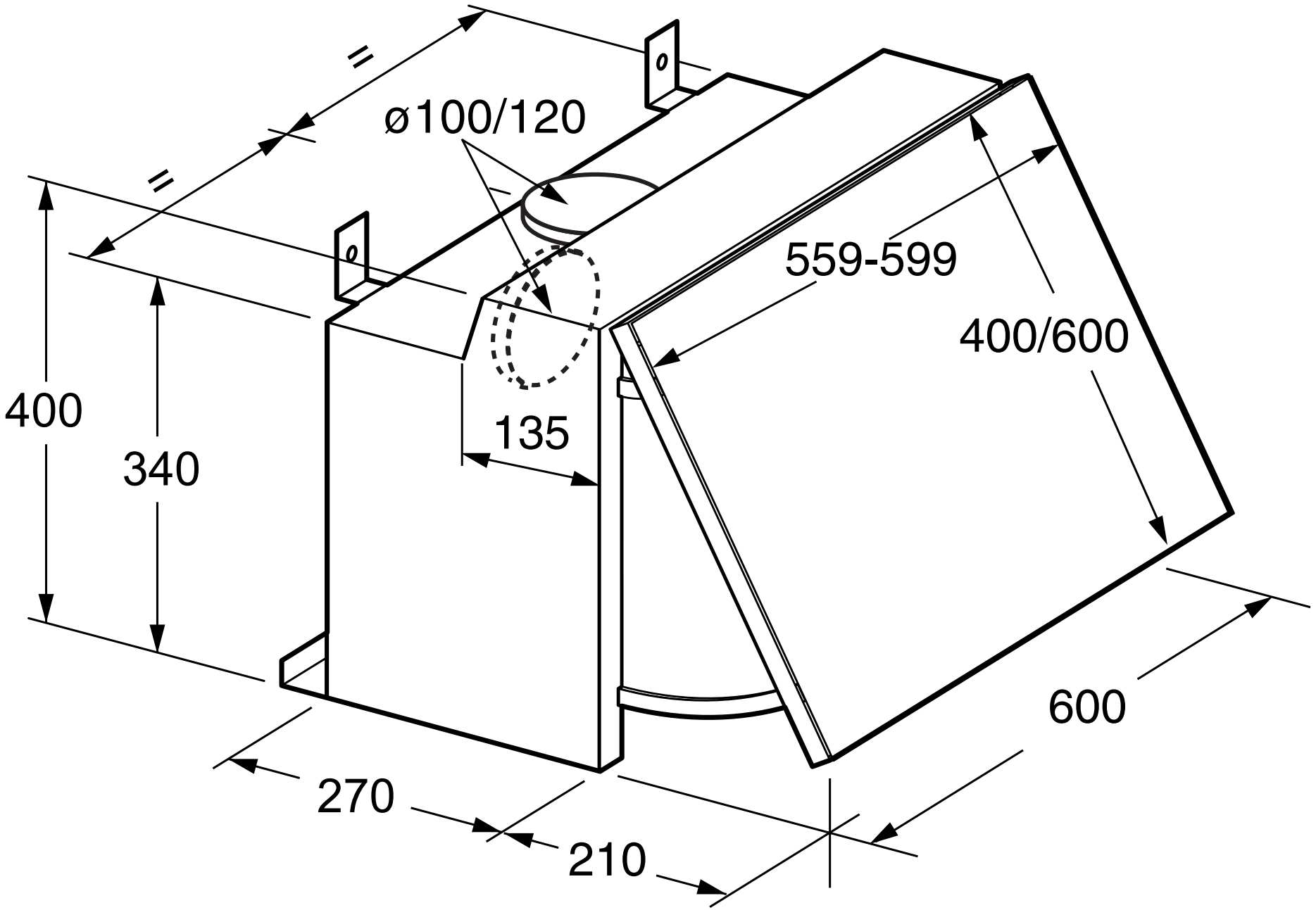
=
=
ø100/120
559-599
400/600
400
340
135
600
270
210