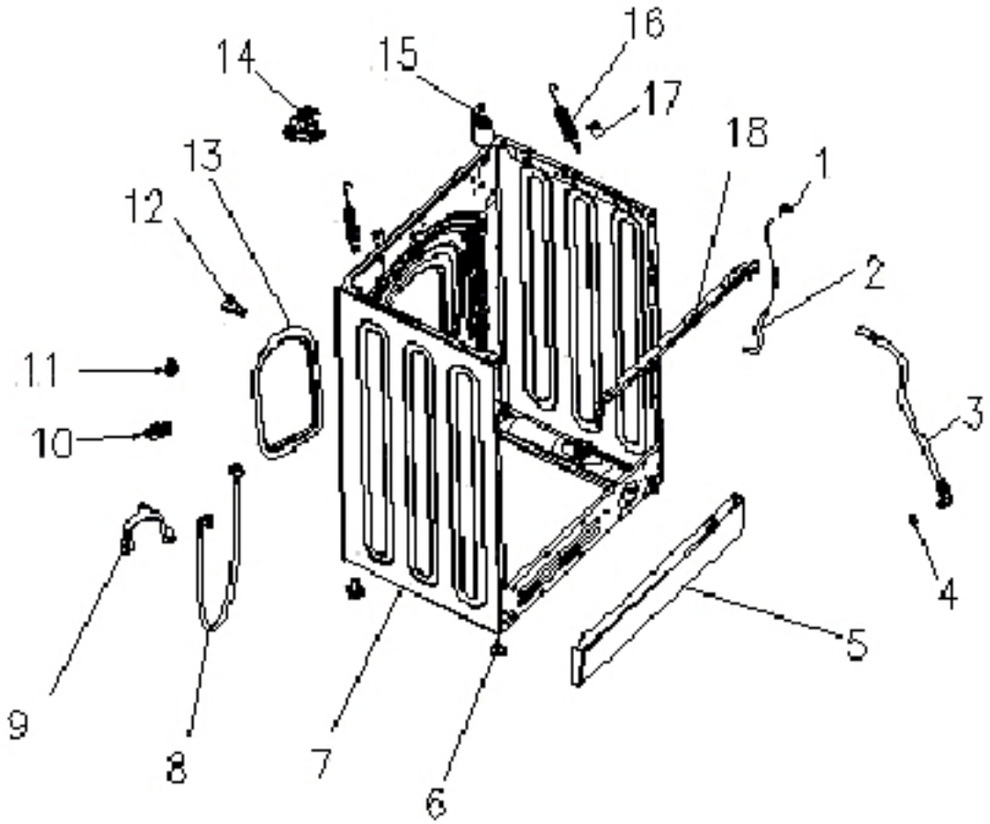
1
2
3
4
5
6
7
8
9
10
11
12
13
14
15
16
17
18

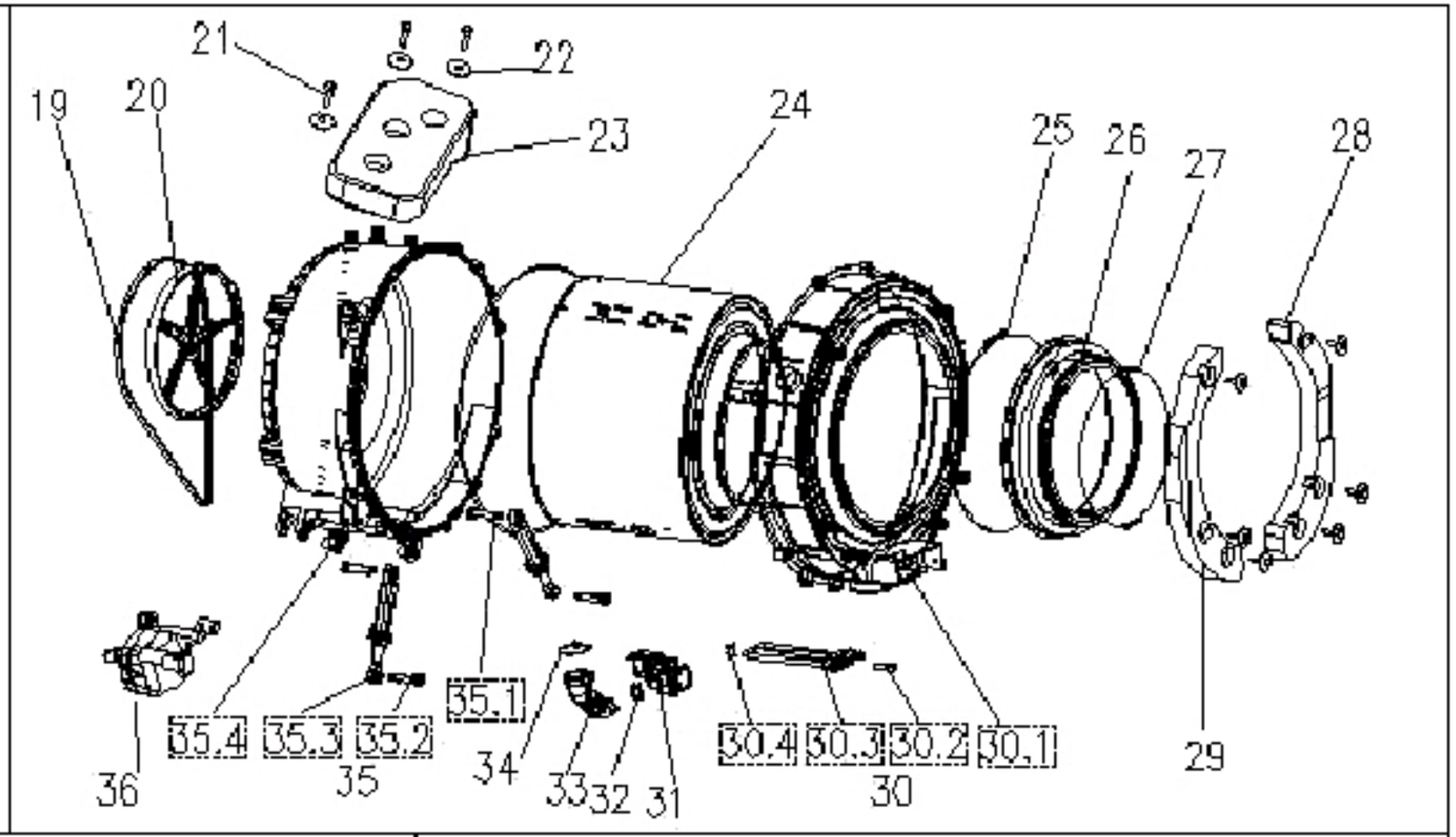
19
20
21
22
23
24
25
26
27
28
29
30
30.1
30.2
30.3
30.4
31
32
33
34
35
35.1
35.2
35.3
35.4
36

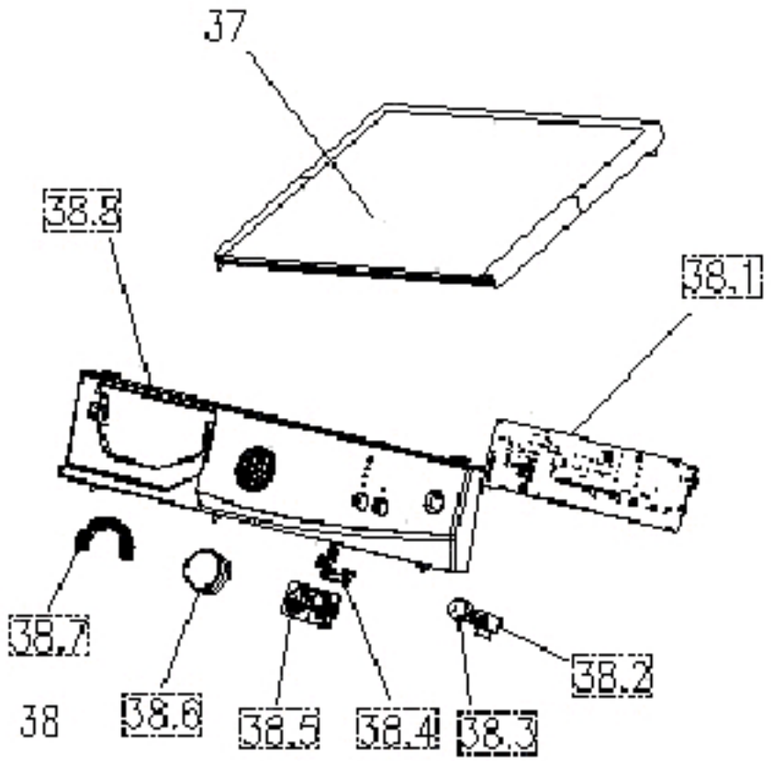
37
38
38.1
38.2
38.3
38.4
38.5
38.6
38.7
38.8

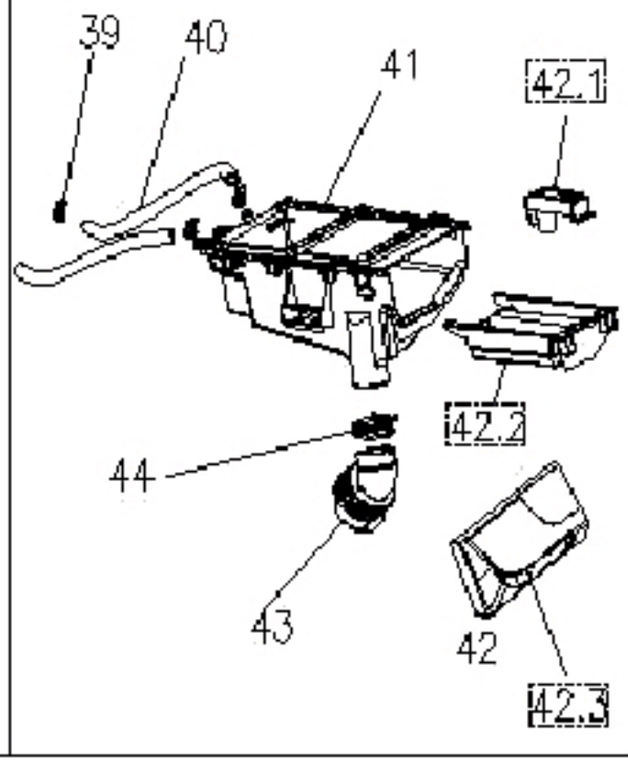
39
40
41
42
42.1
42.2
42.3
43
44

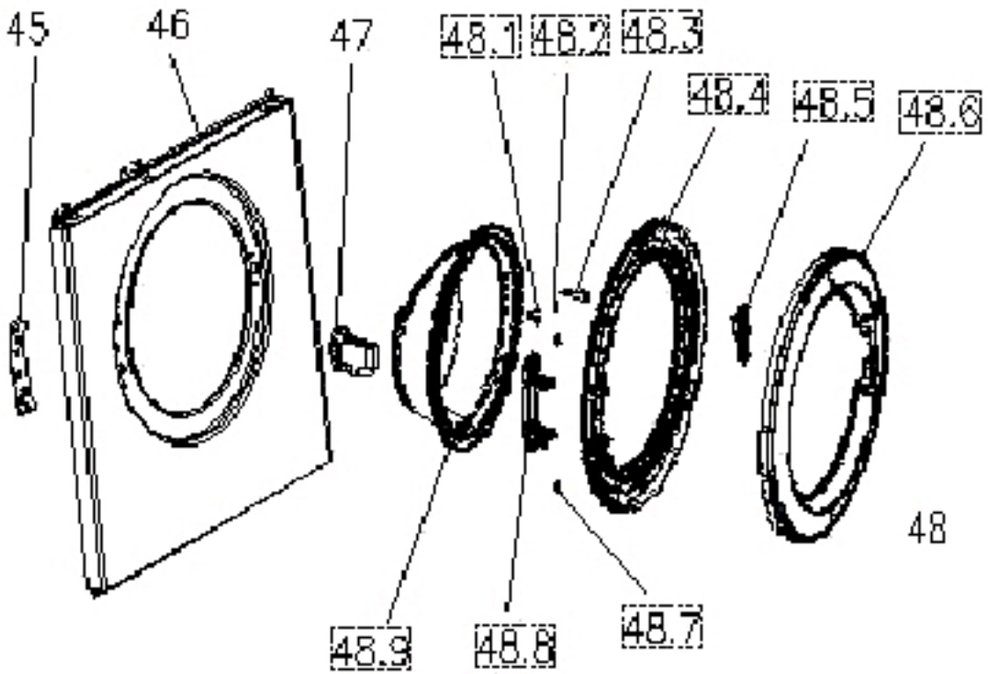
45
46
47
48
48.1
48.2
48.3
48.4
48.5
48.6
48.7
48.8
48.9

S01