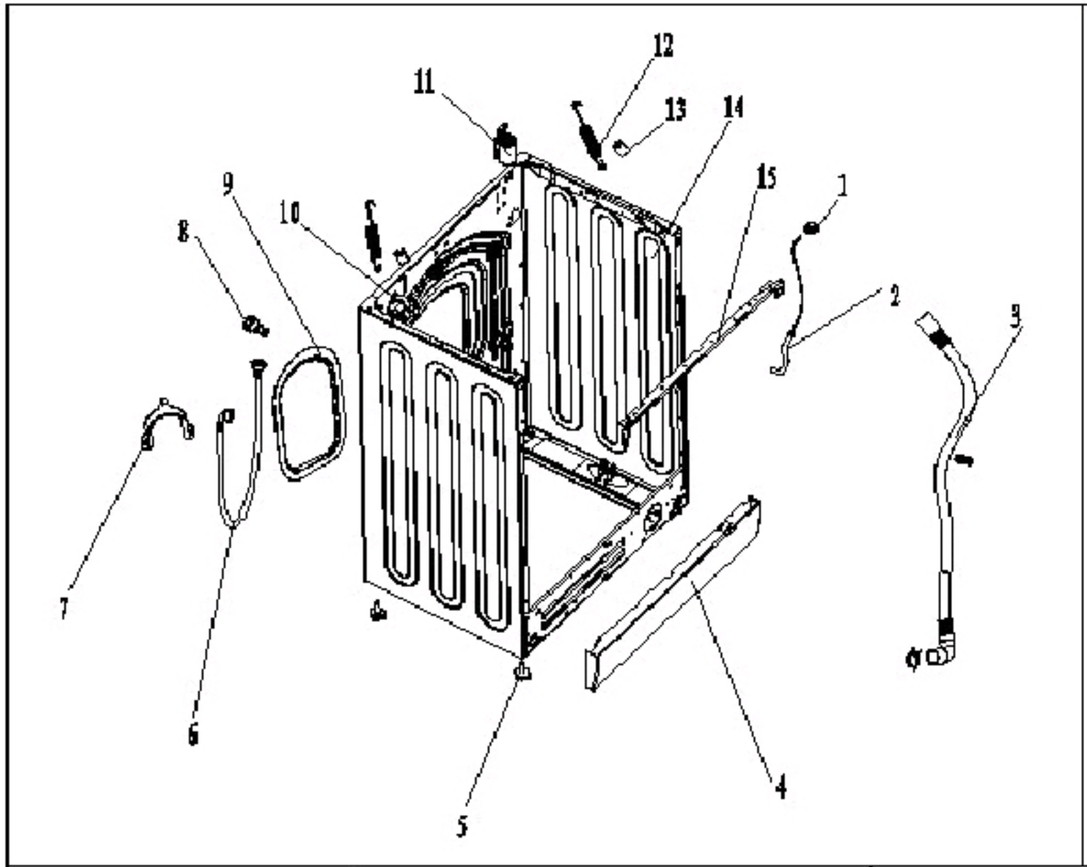
1
2
3
4
5
6
7
8
9
10
11
12
13
14
15

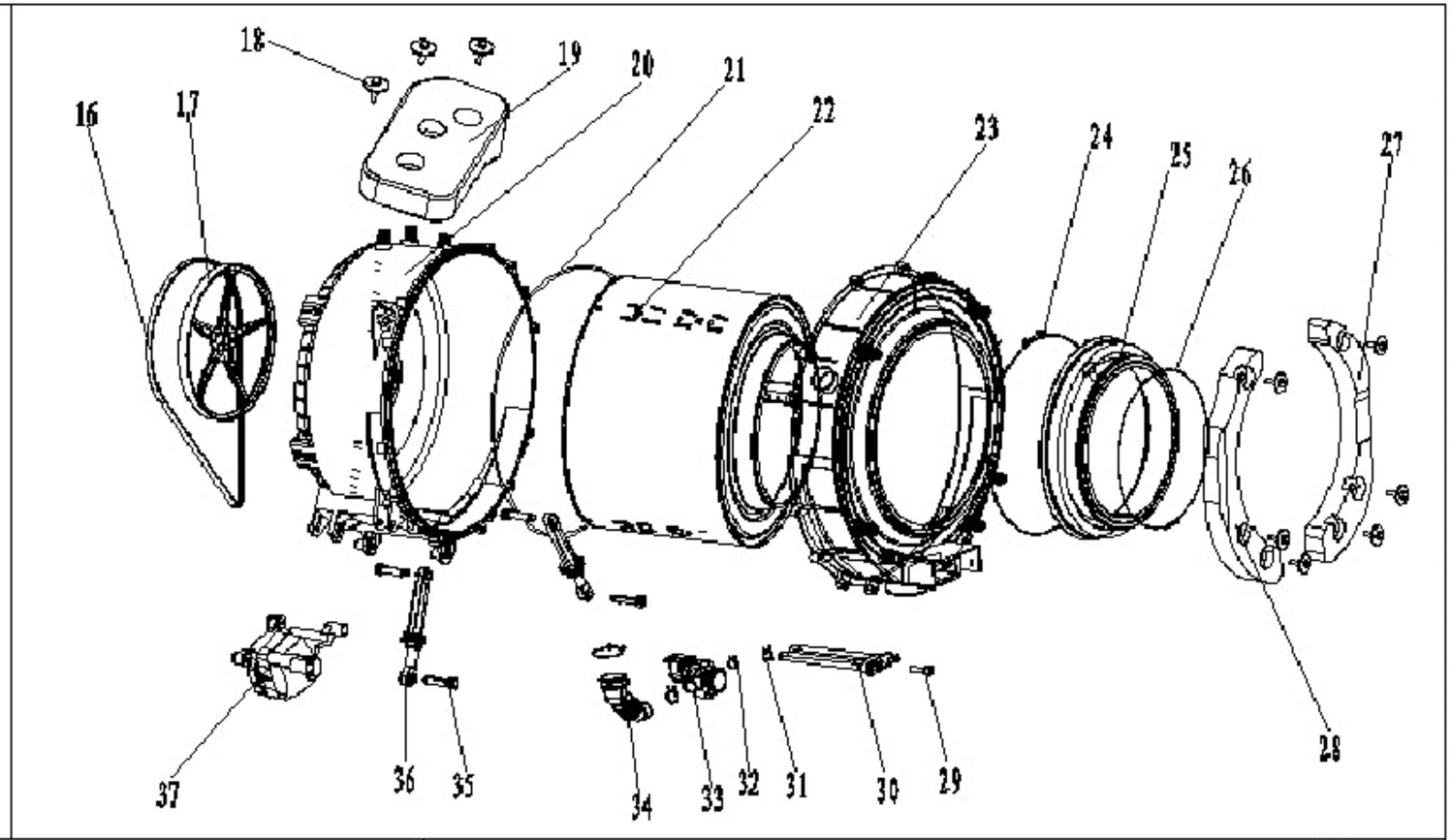
16
17
18
19
20
21
22
23
24
25
26
27
28
29
30
31
32
33
34
35
36
37

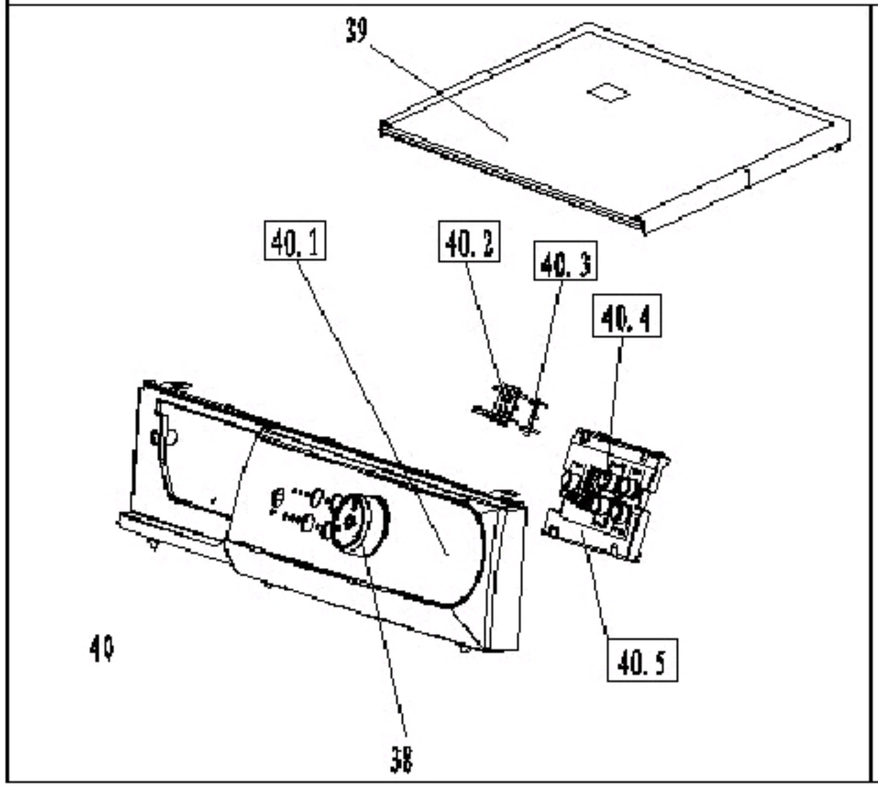
39
40.1
40.2
40.3
40.4
40.5
40
38

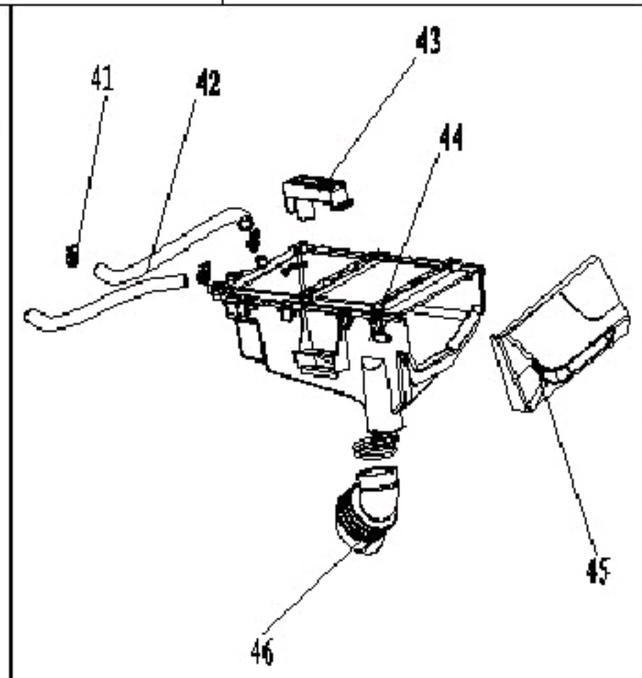
41
42
43
44
45
46

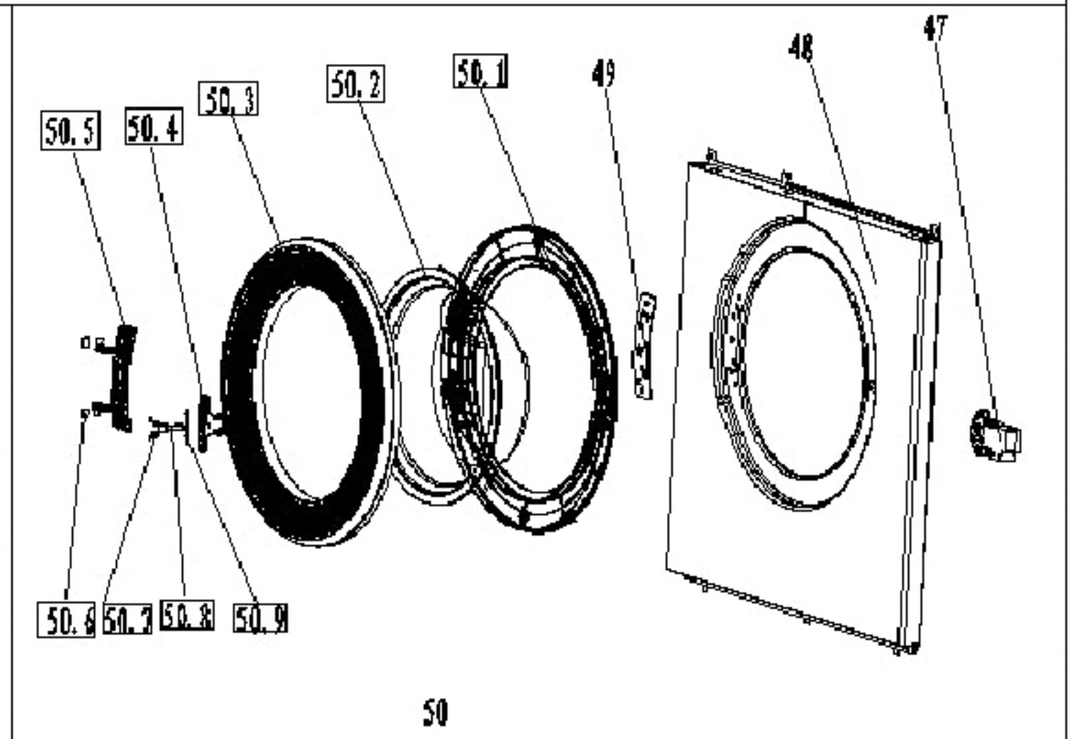
50.5
50.4
50.3
50.2
50.1
49
48
47
50.6
50.7
50.8
50.9
50