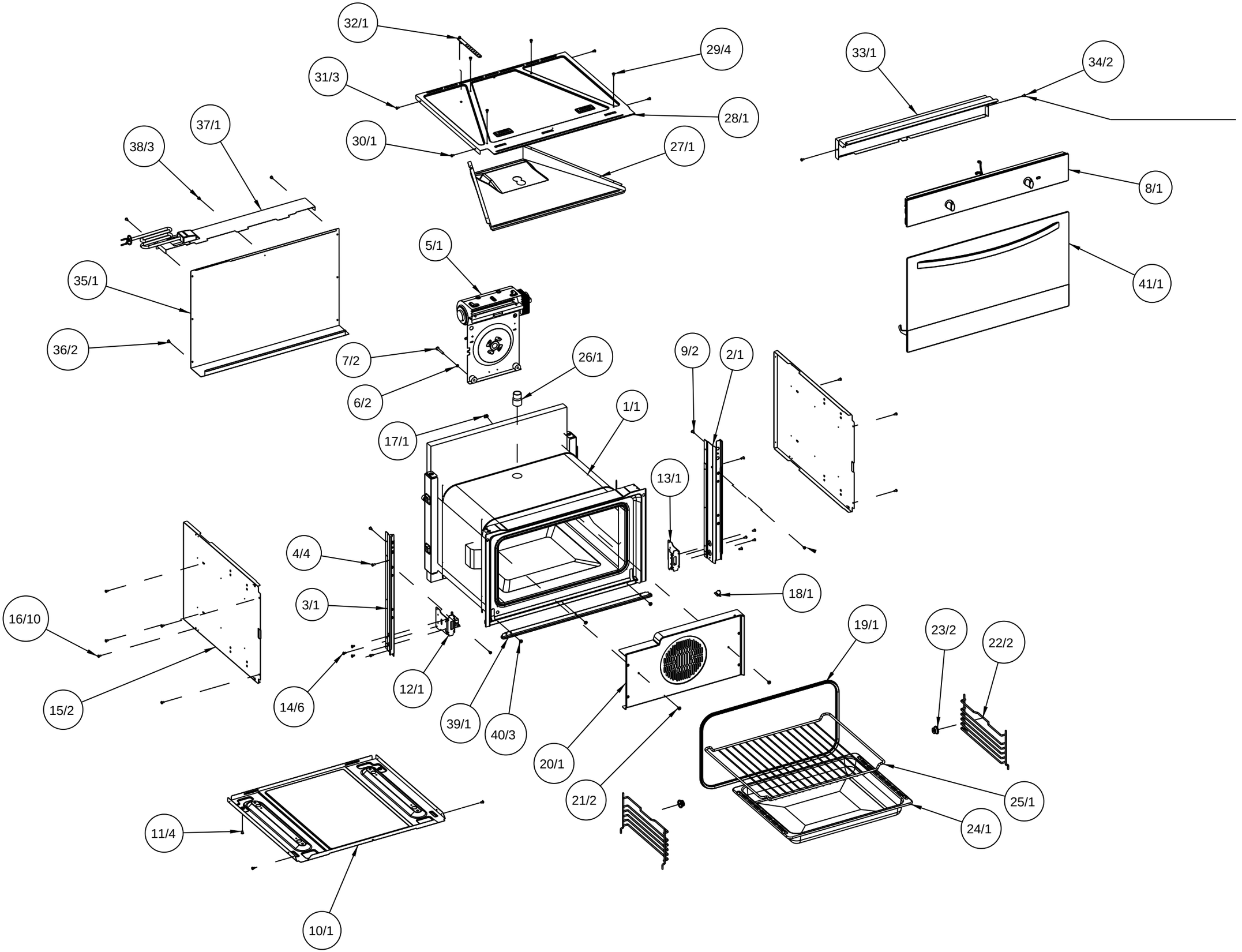
32/1
29/4
31/3
28/1
30/1
27/1
33/1
34/2
8/1
41/1
38/3
37/1
35/1
36/2
5/1
7/2
6/2
26/1
9/2
2/1
1/1
17/1
13/1
4/4
3/1
16/10
15/2
14/6
12/1
39/1
40/3
18/1
19/1
23/2
22/2
20/1
21/2
25/1
24/1
11/4
10/1

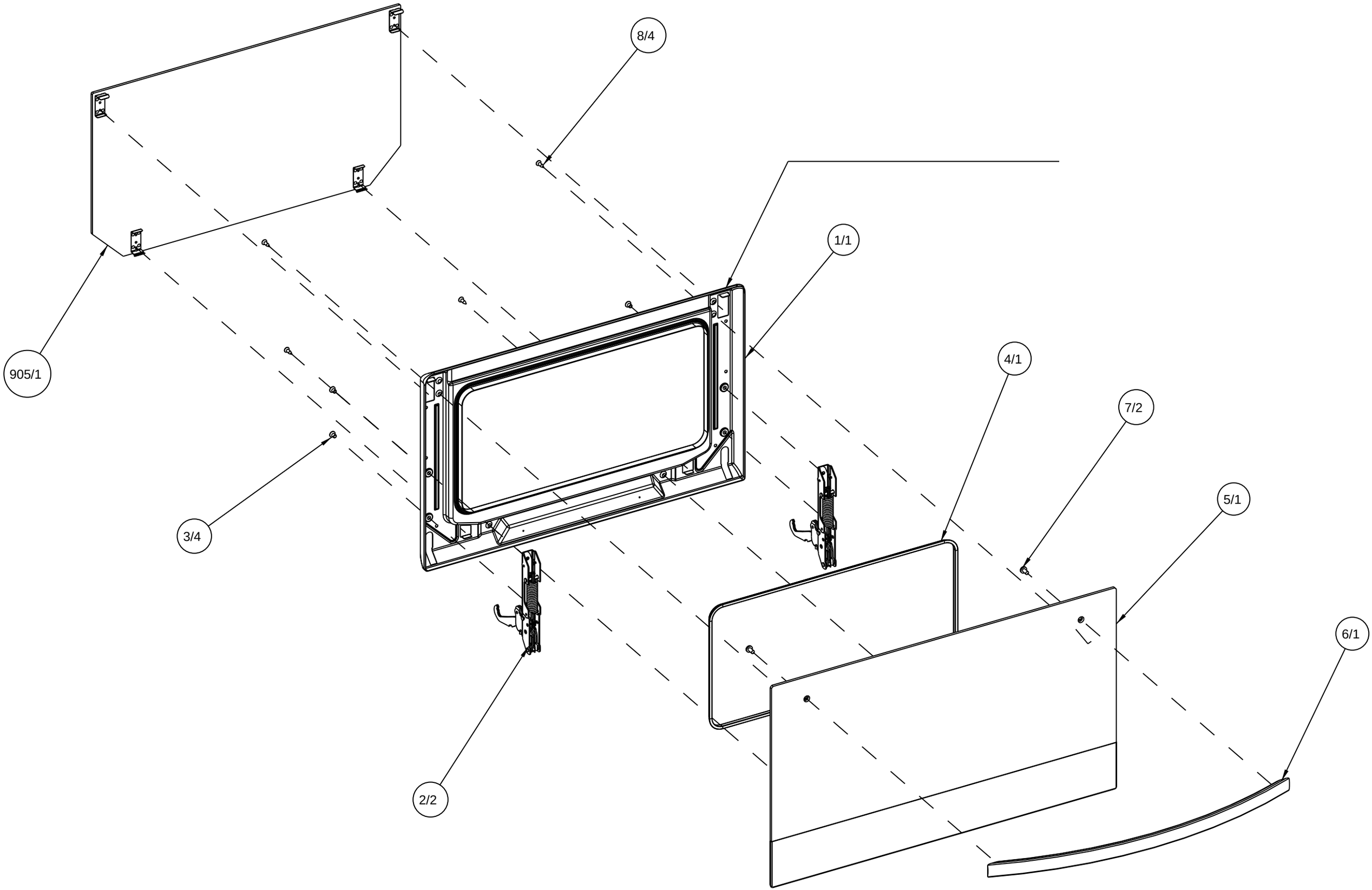
8/4
1/1
905/1
4/1
7/2
3/4
5/1
6/1
2/2

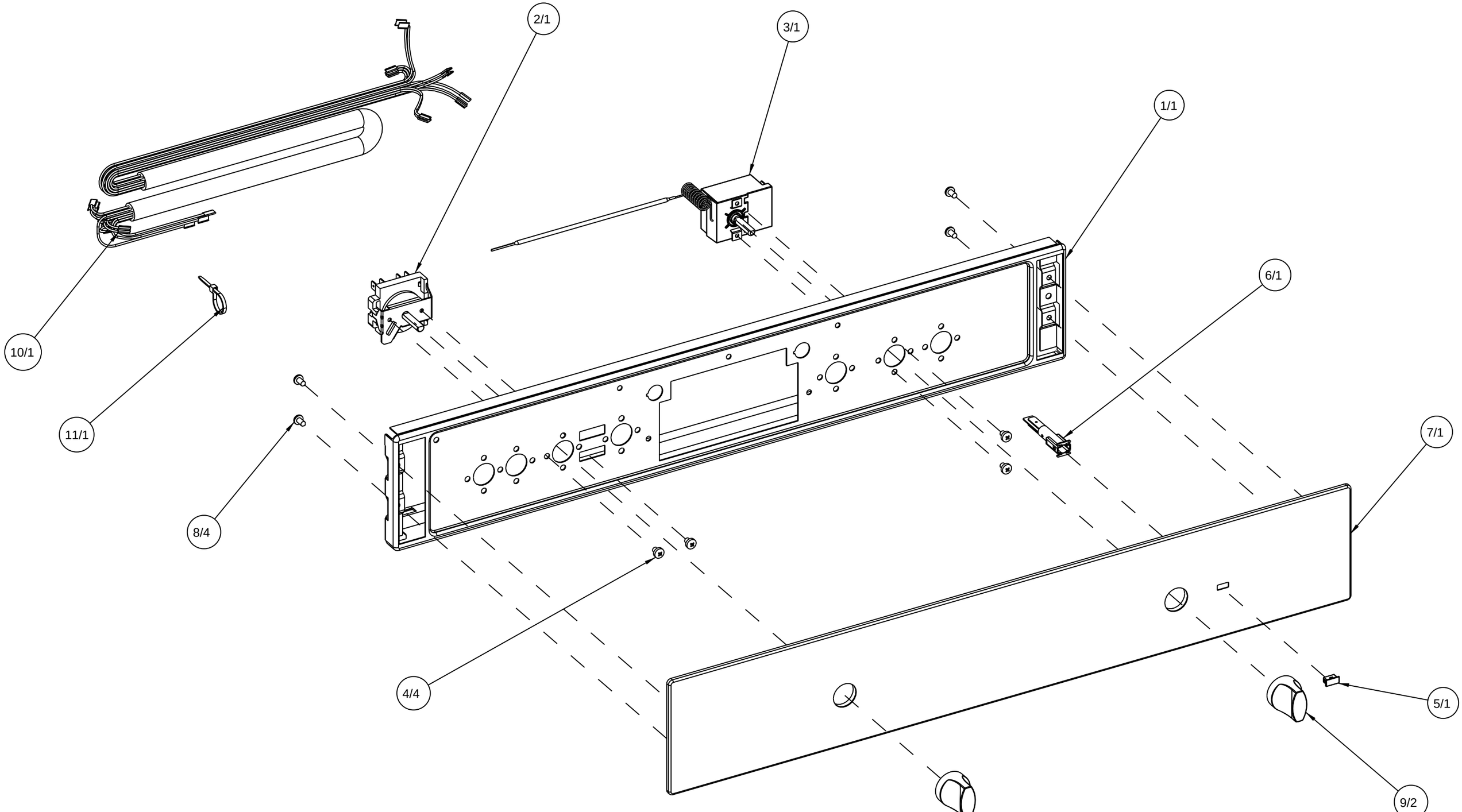
2/1
3/1
1/1
10/1
6/1
11/1
7/1
8/4
4/4
5/1
9/2

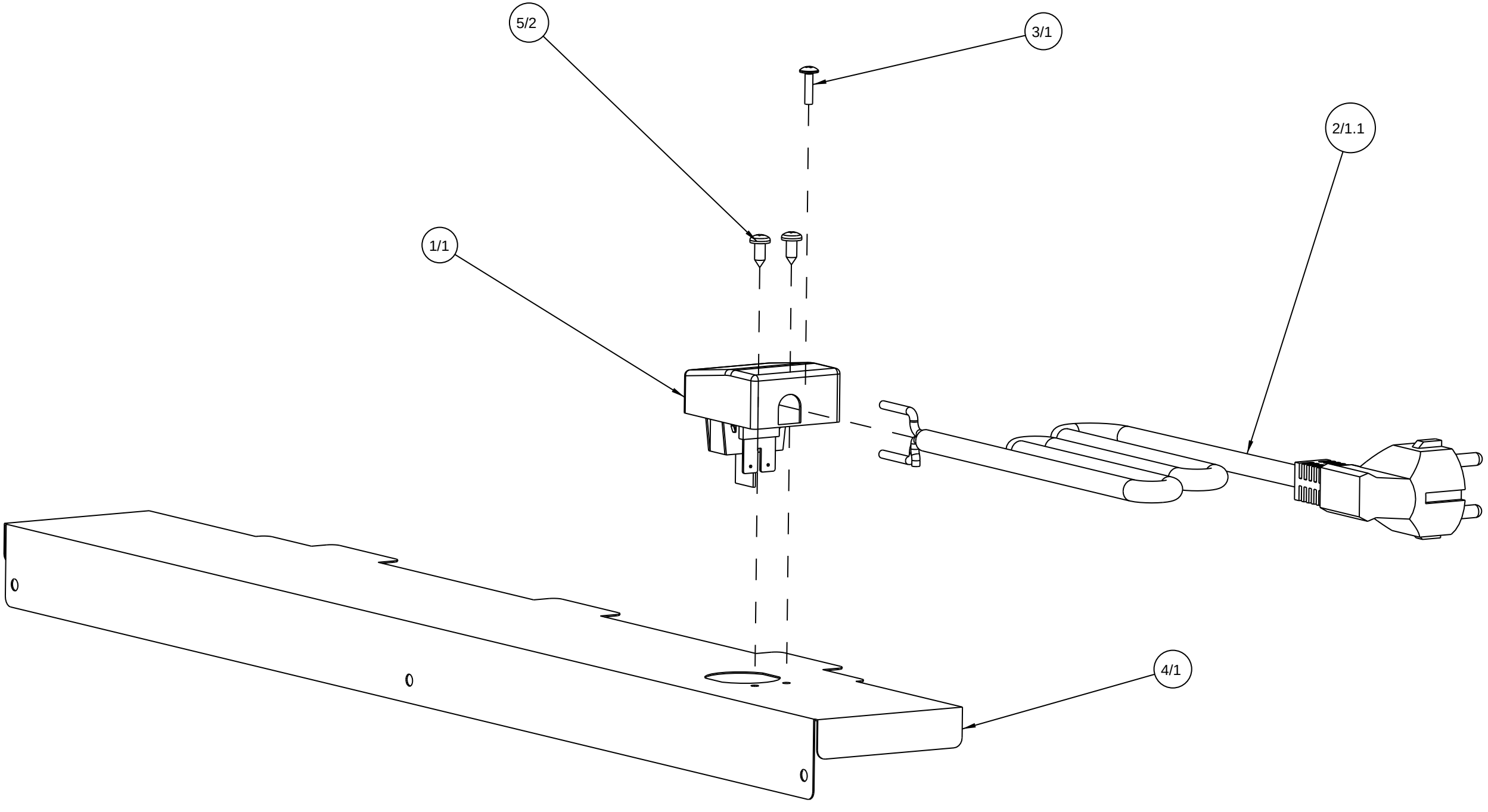
5/2
3/1
2/1.1
1/1
4/1

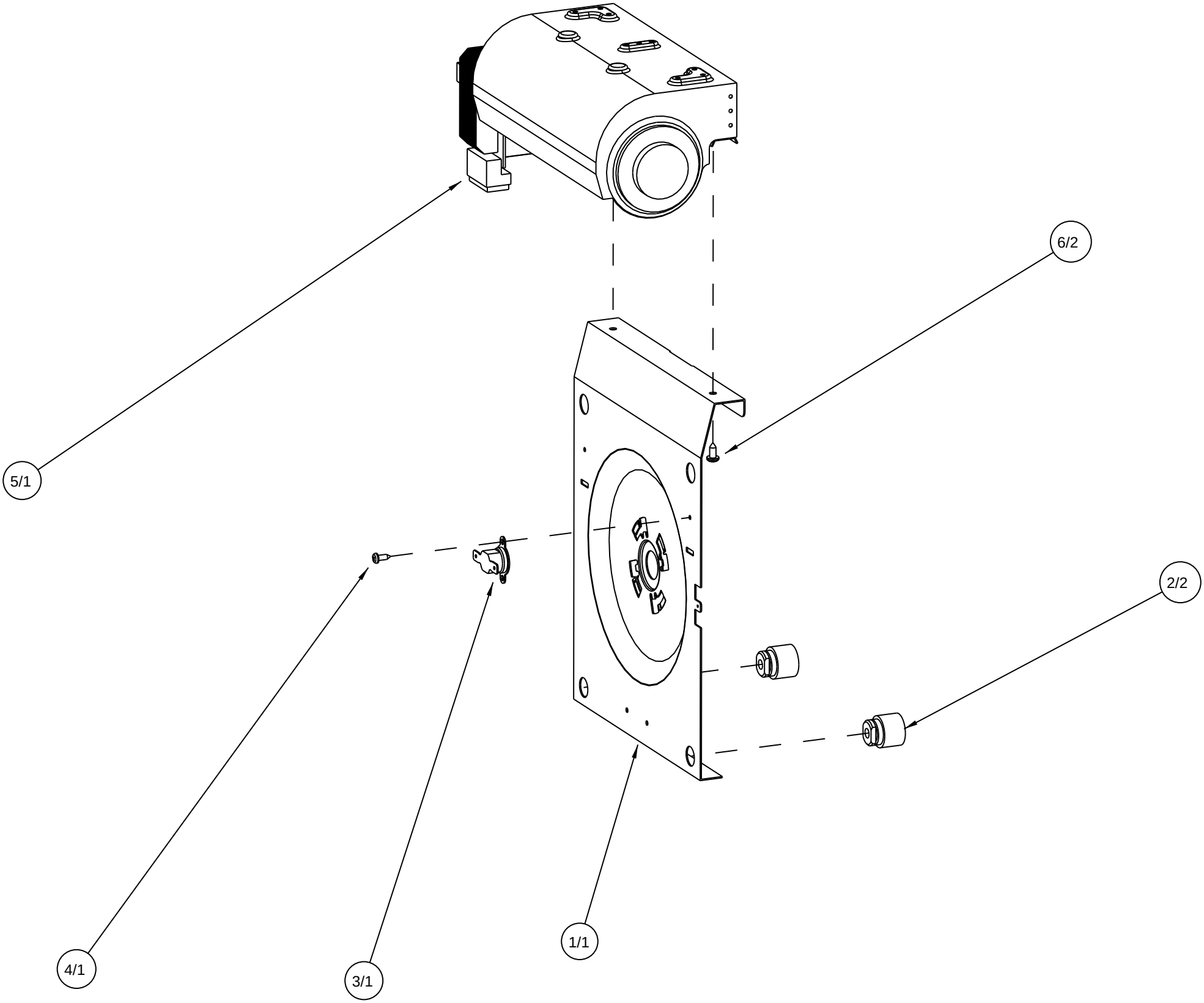
5/1
6/2
2/2
4/1
3/1
1/1

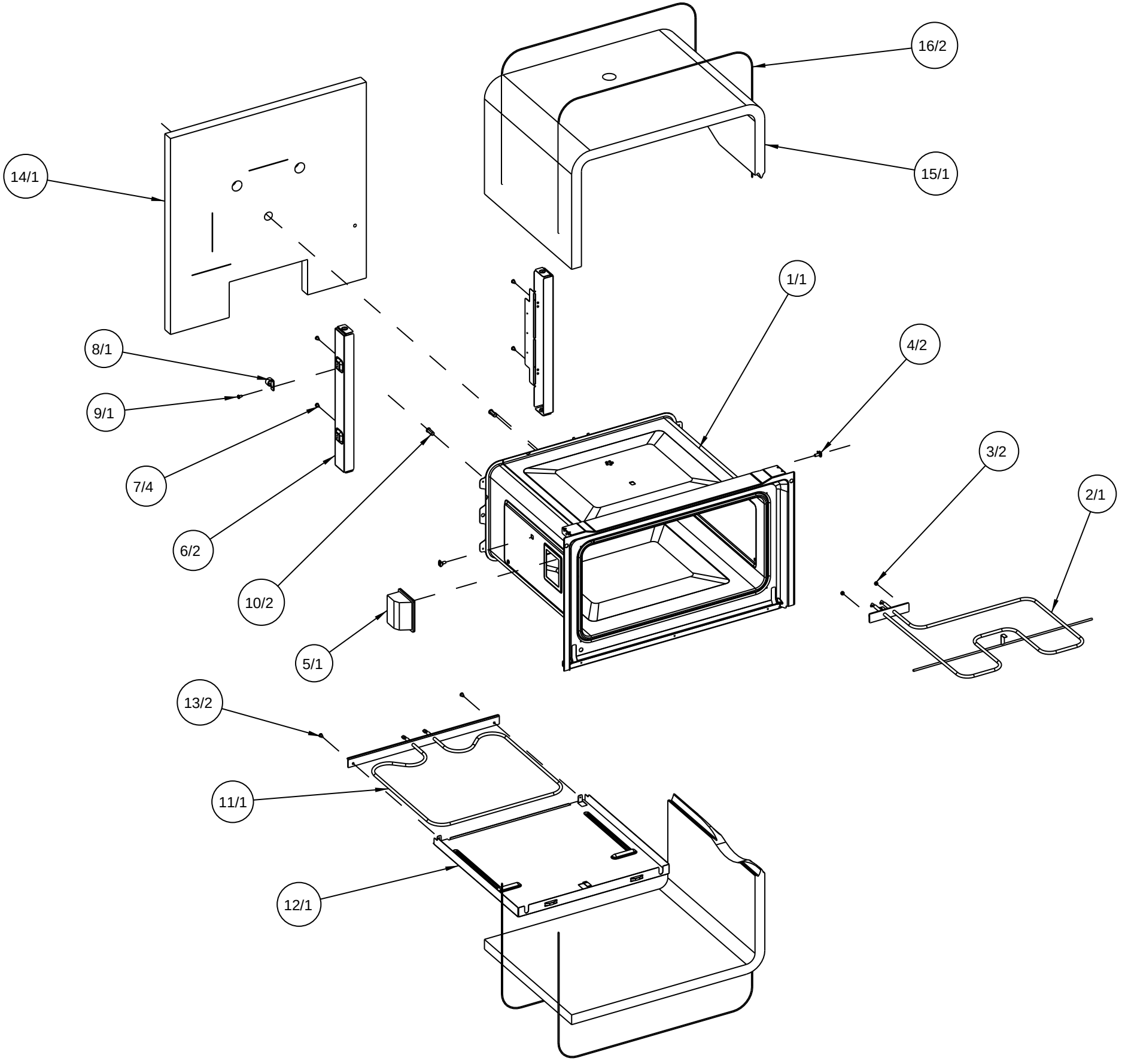
16/2
15/1
14/1
1/1
8/1
4/2
9/1
3/2
2/1
7/4
6/2
10/2
5/1
13/2
11/1
12/1