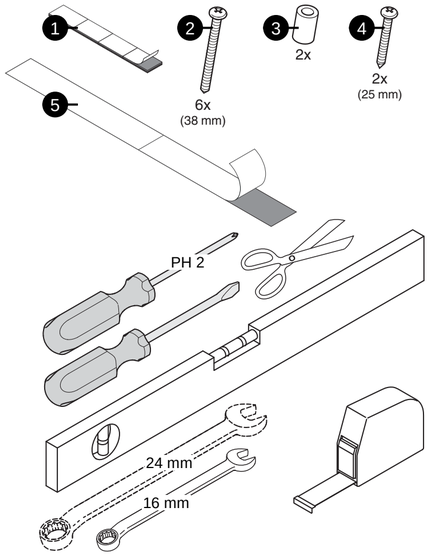

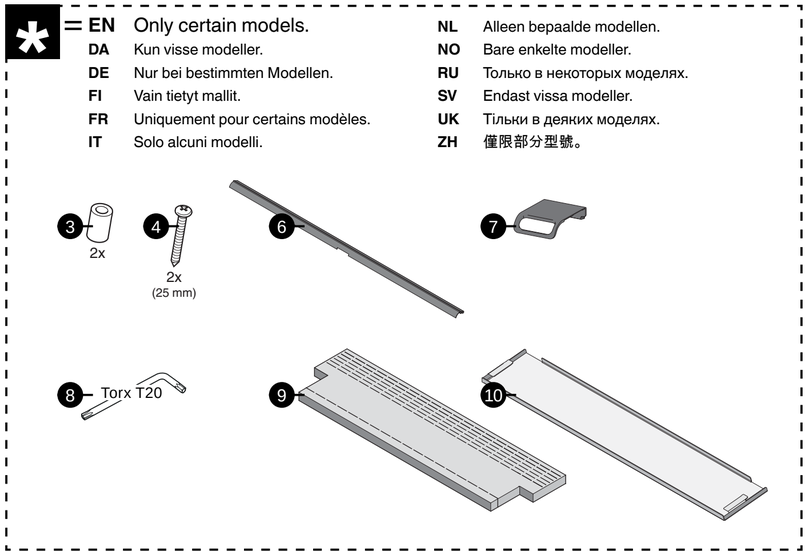

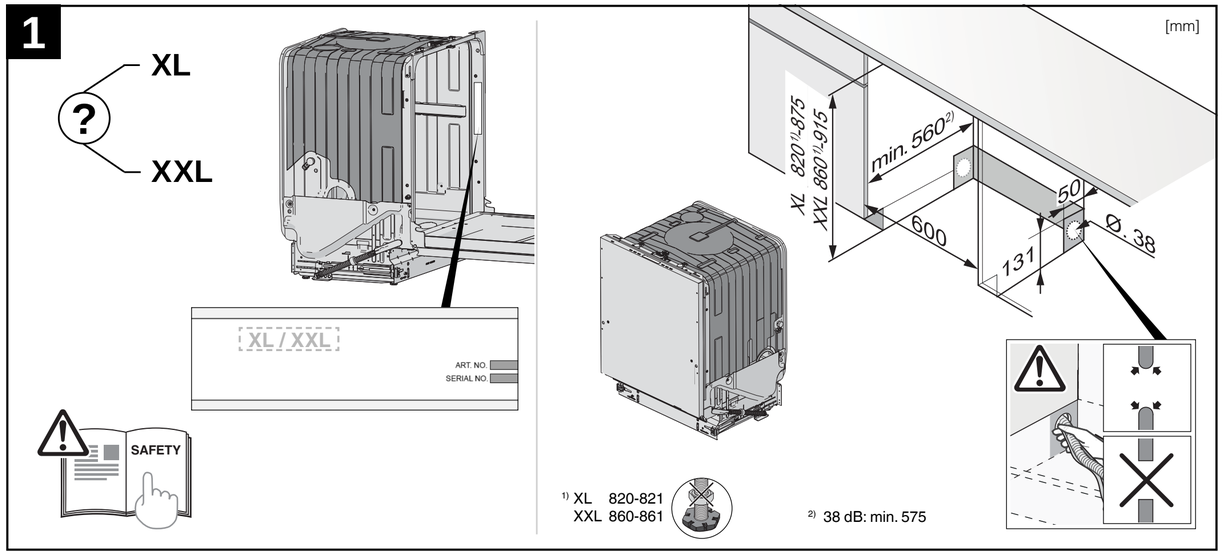

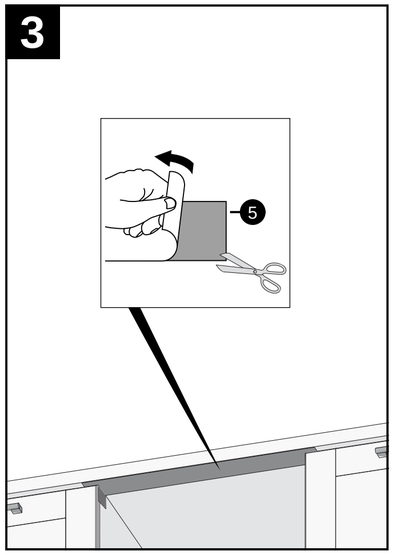

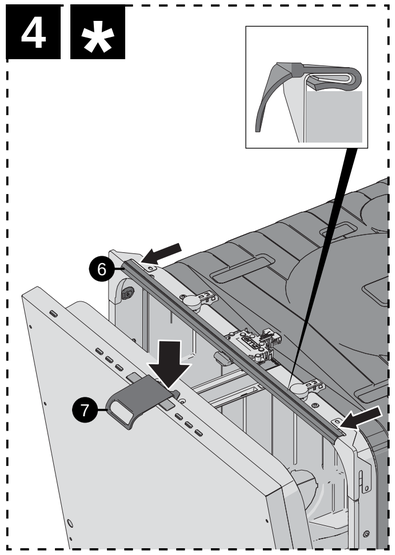

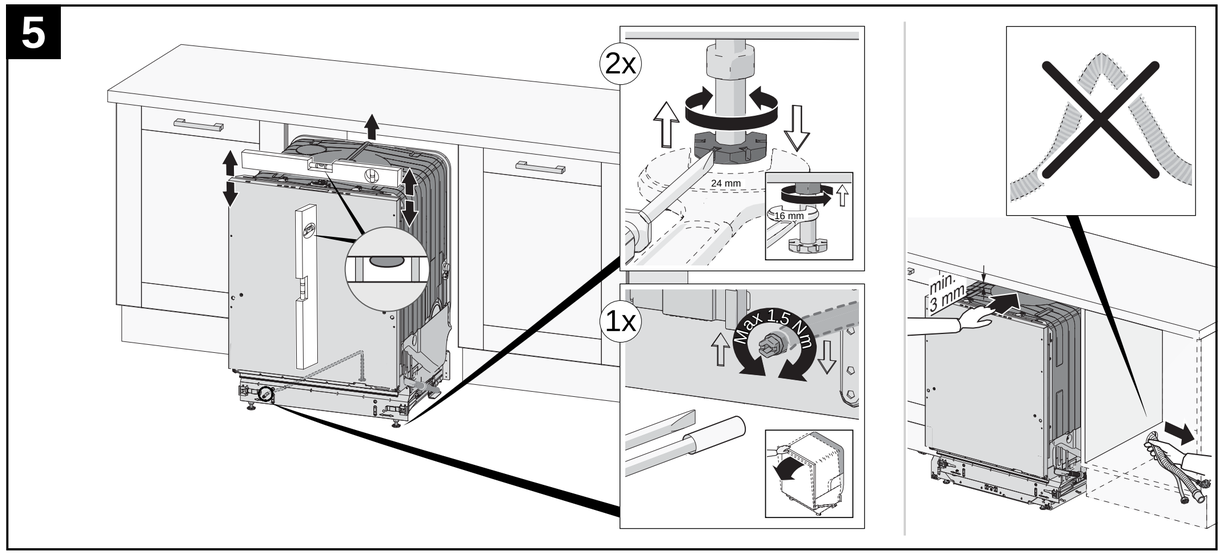

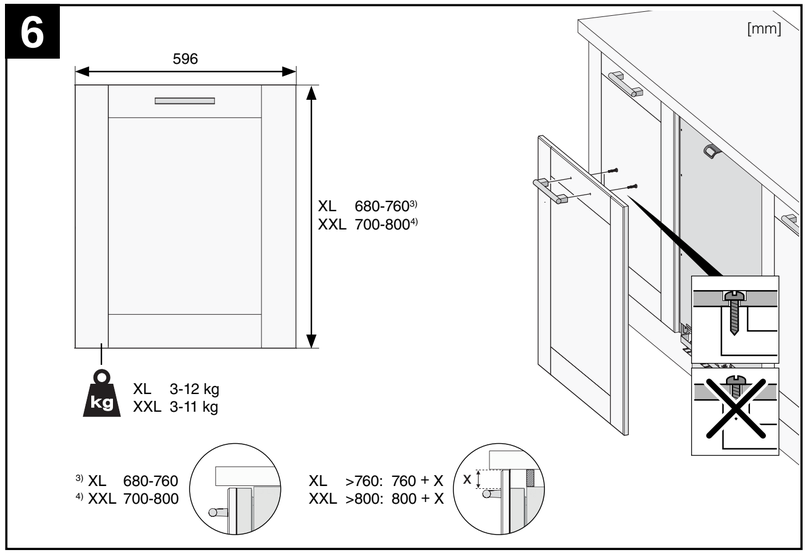

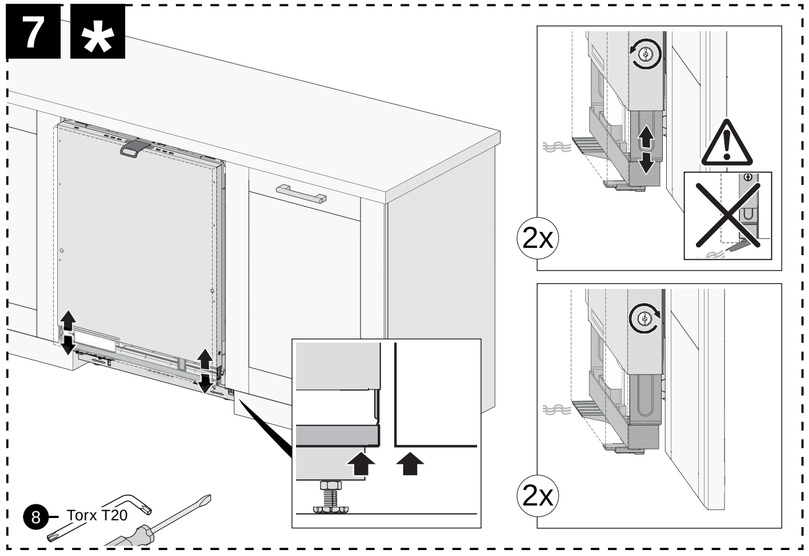

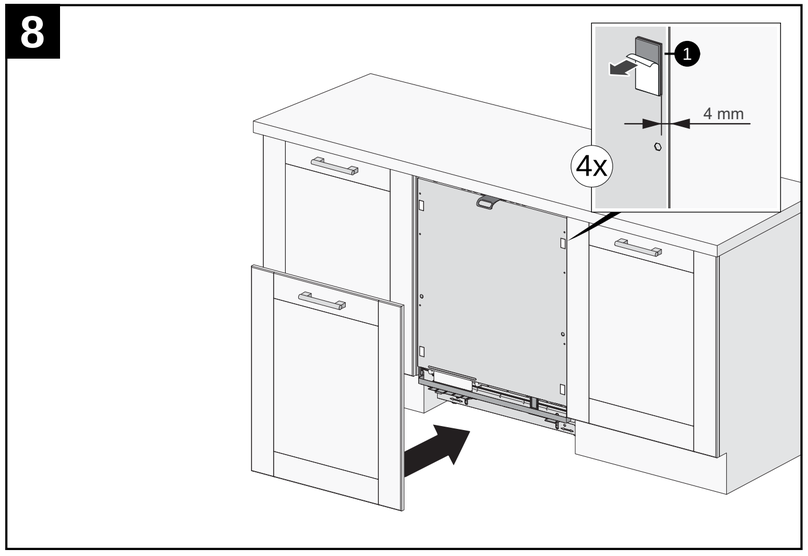

Art. No.: 624961. Rev. 01. We reserve the right to make changes.

9

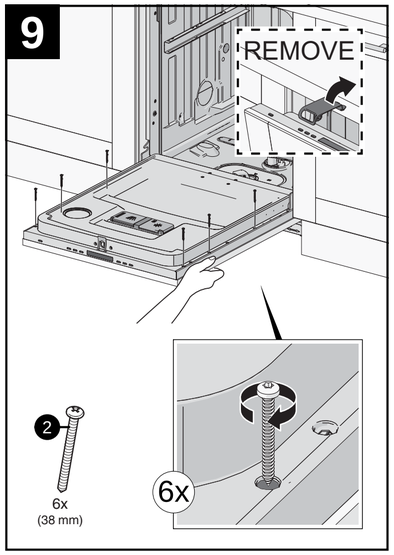

10 *

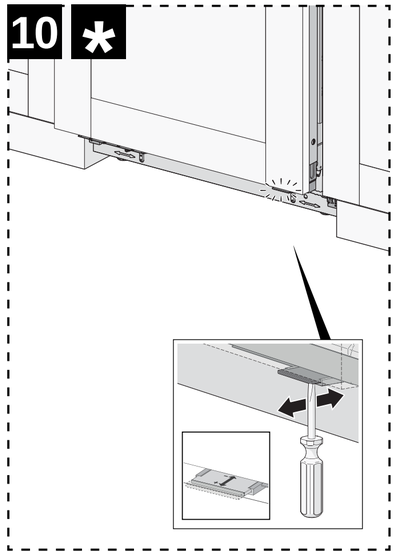

11

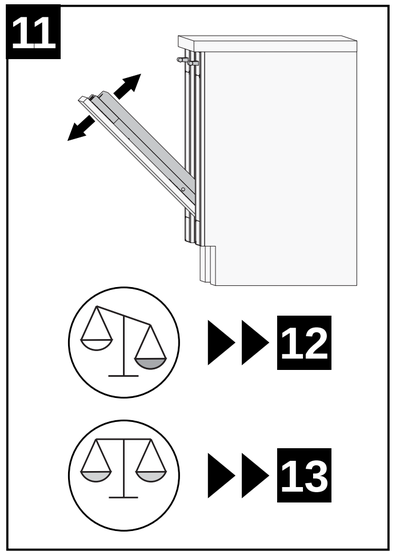

12

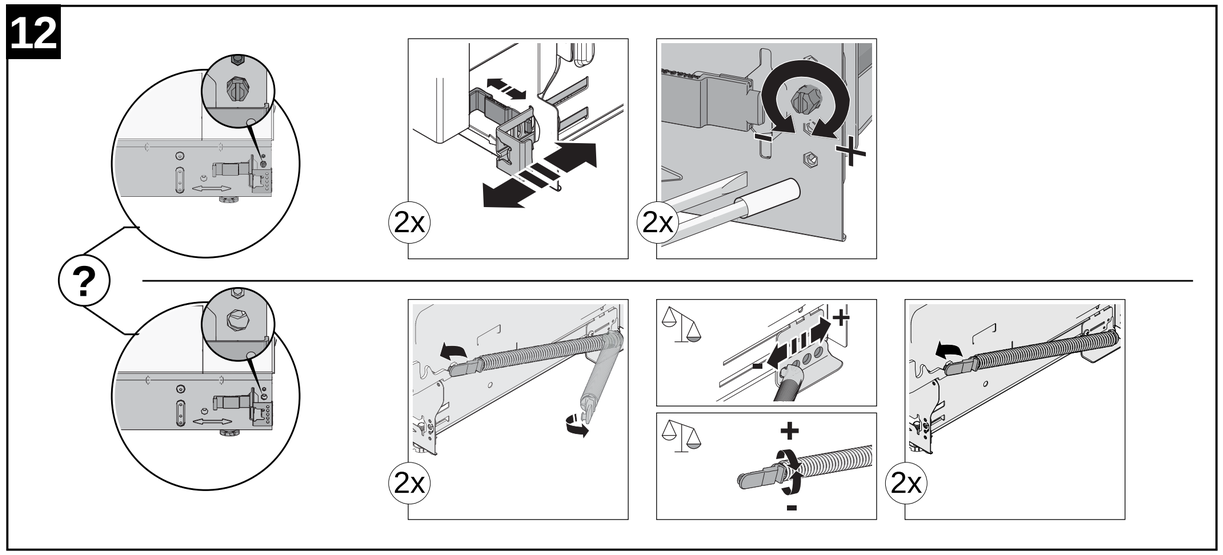

13

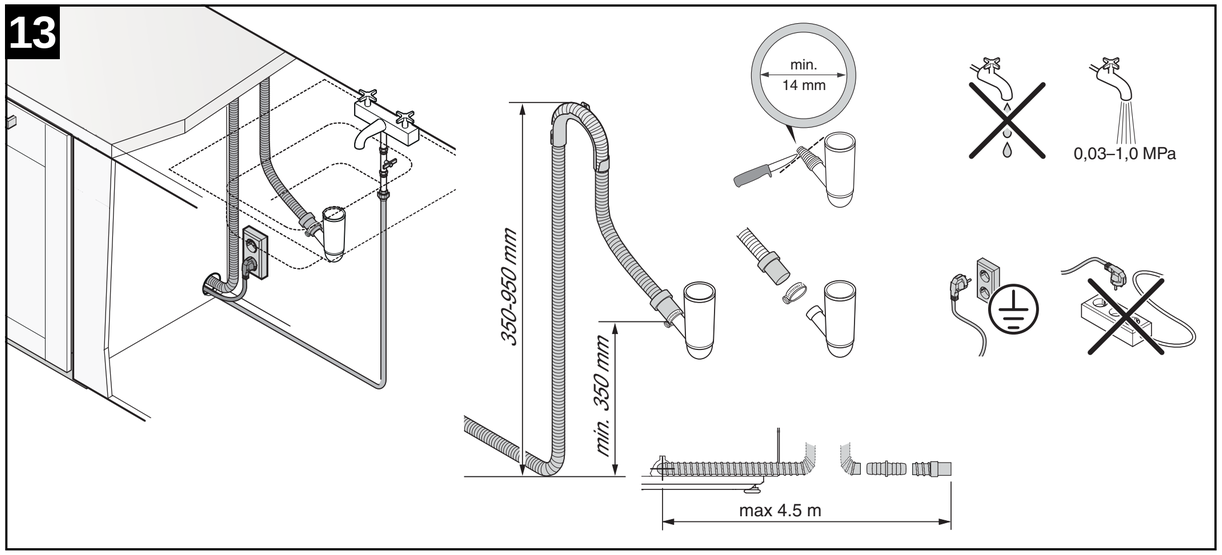

14

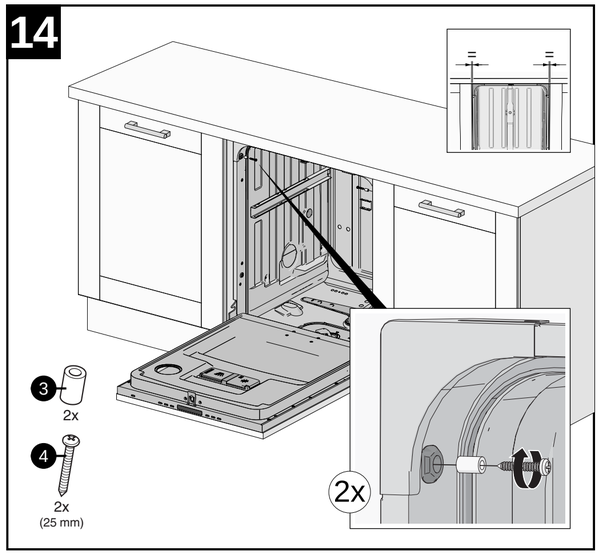

15 *

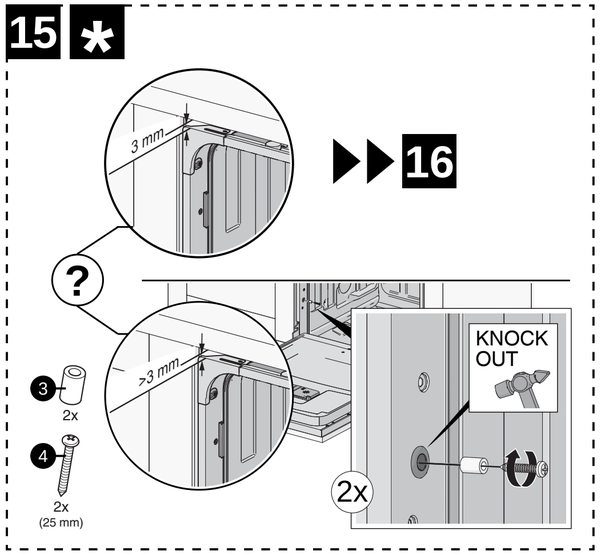

16 *

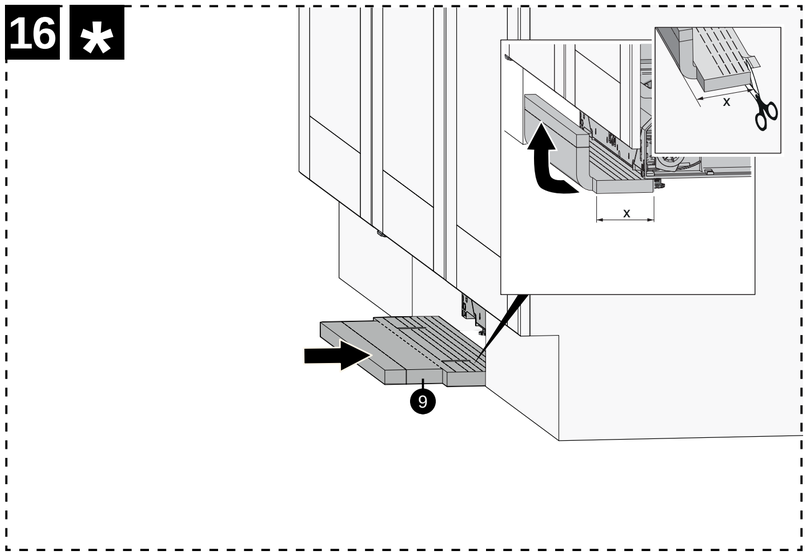
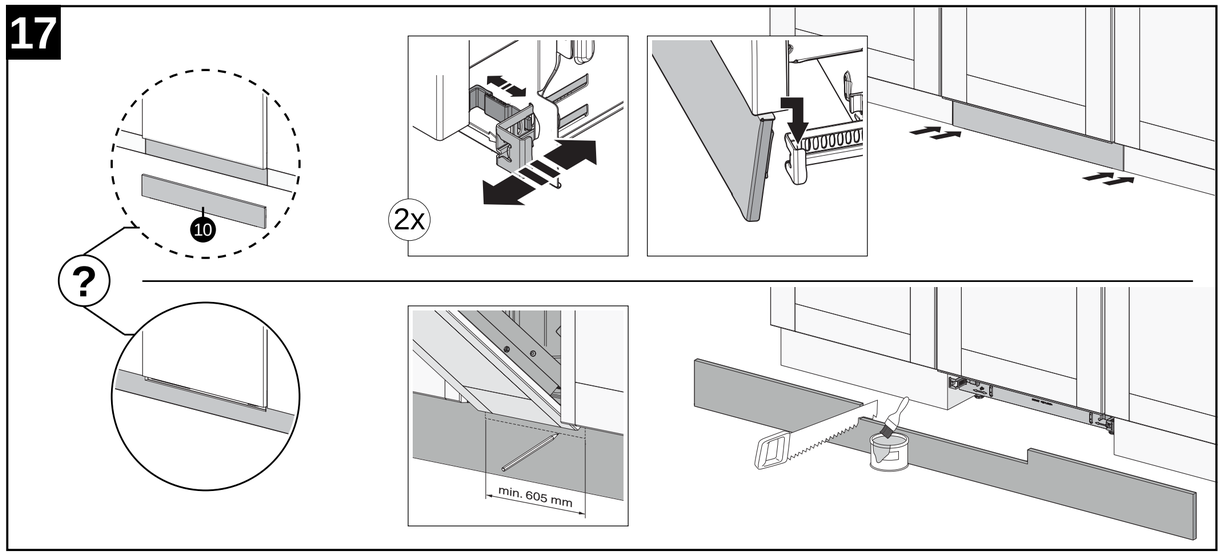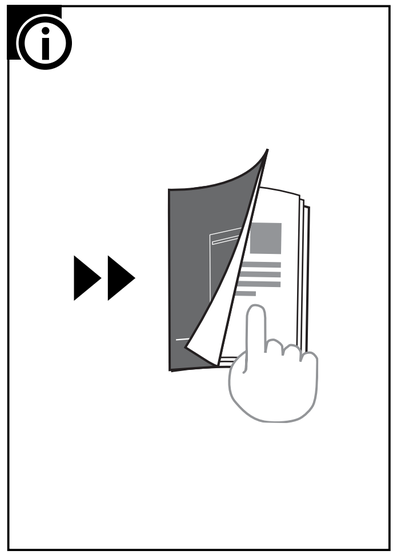
17