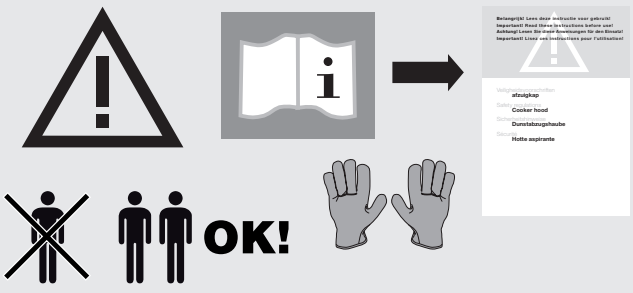

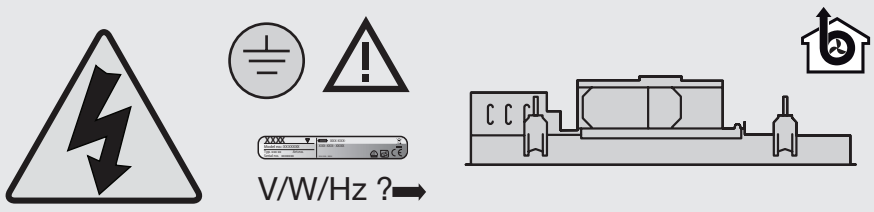

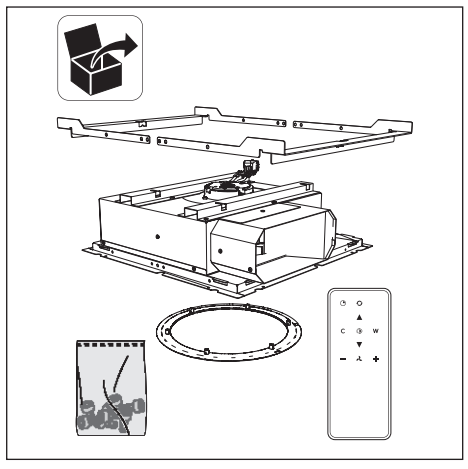

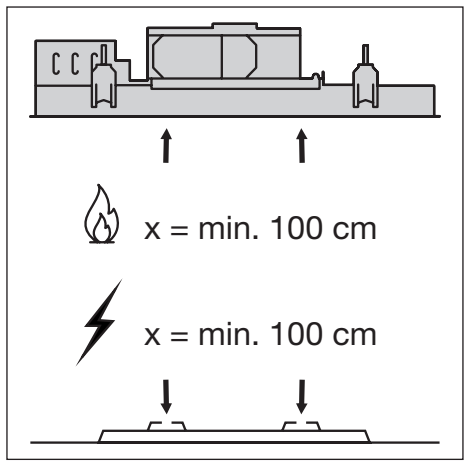

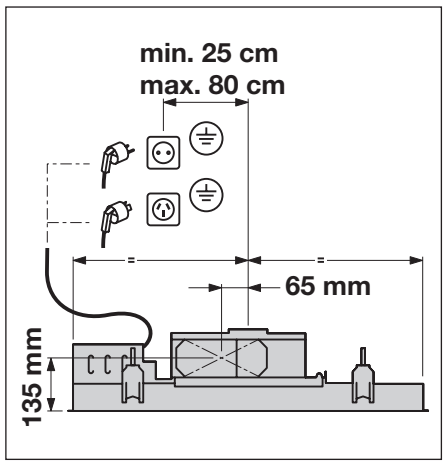

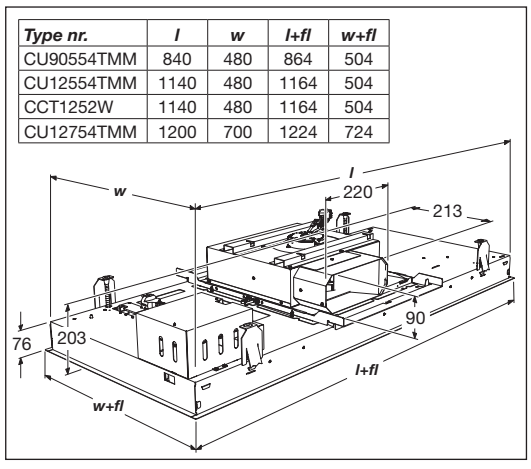

Type nr.	l	w	l+fl	w+fl
CU90554TMM	840	480	864	504
CU12554TMM	1140	480	1164	504
CCT1252W	1140	480	1164	504
CU12754TMM	1200	700	1224	724

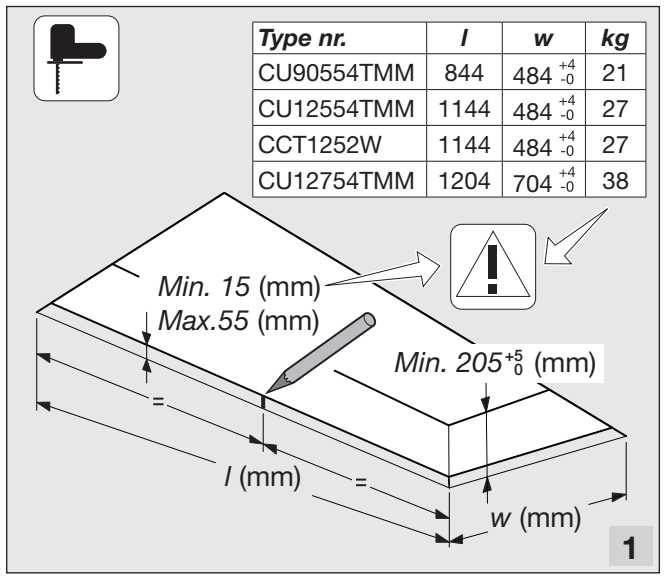

Type nr.	l	w	kg
CU90554TMM	844	484 +4 -0	21
CU12554TMM	1144	484 +4 -0	27
CCT1252W	1144	484 +4 -0	27
CU12754TMM	1204	704 +4 -0	38

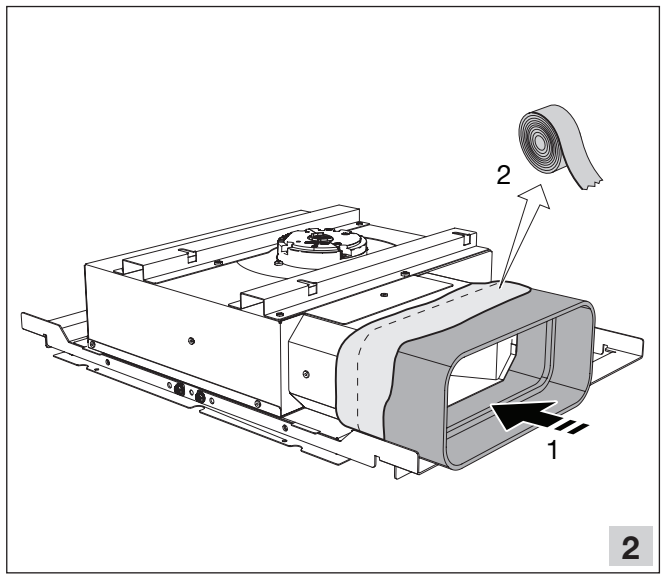

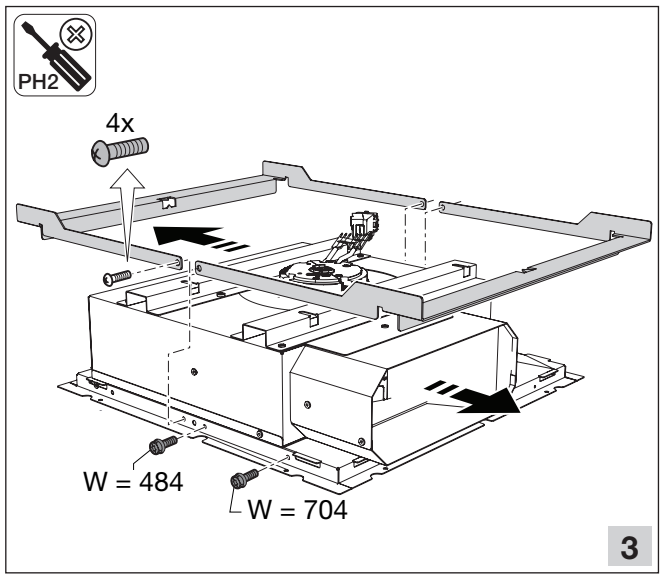

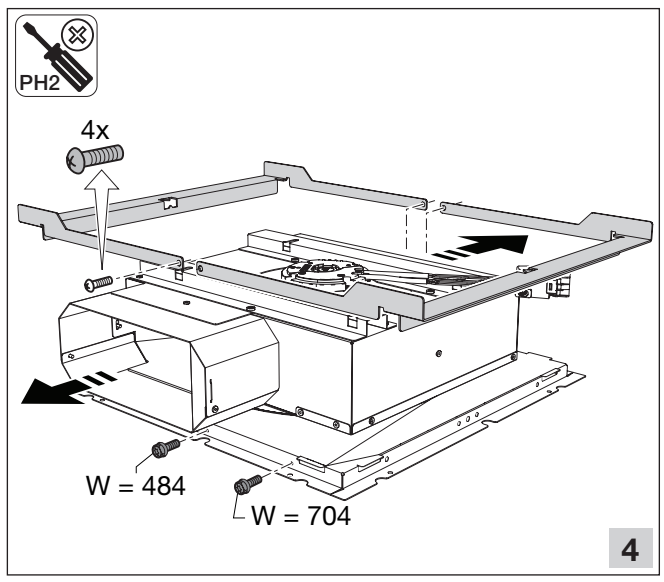

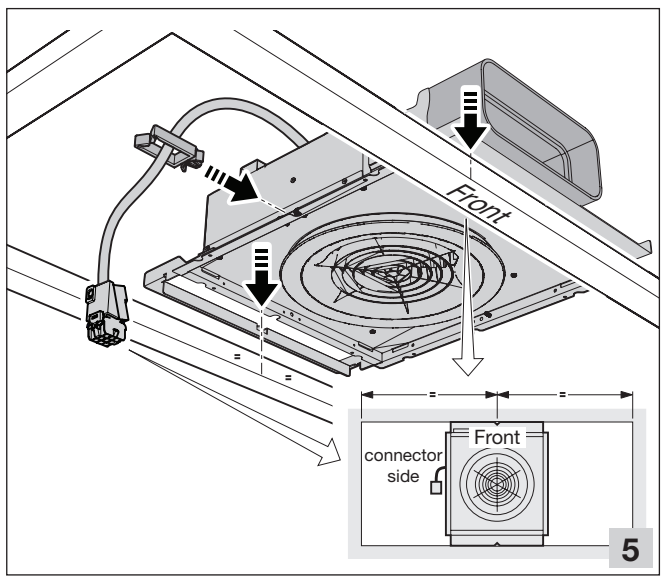

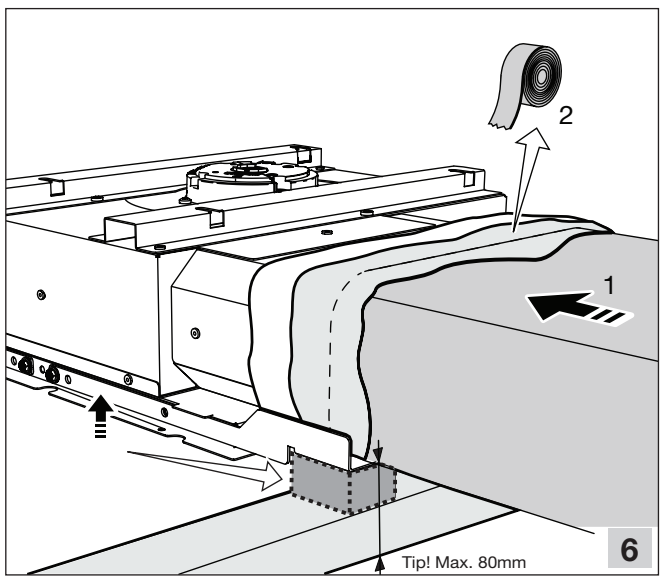

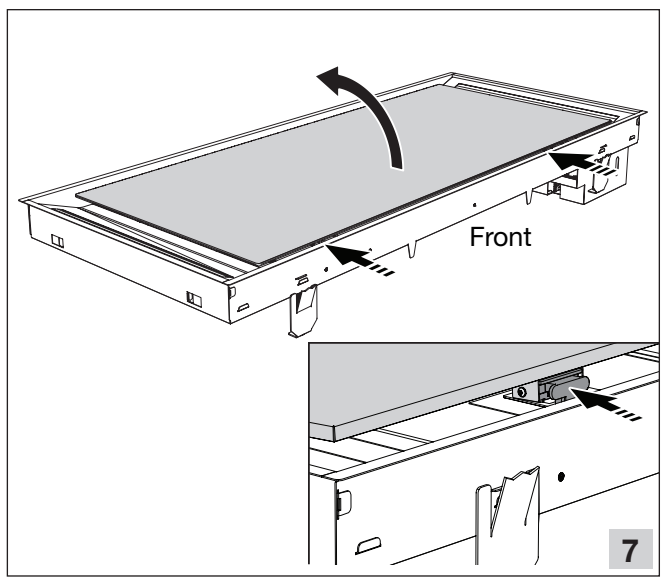

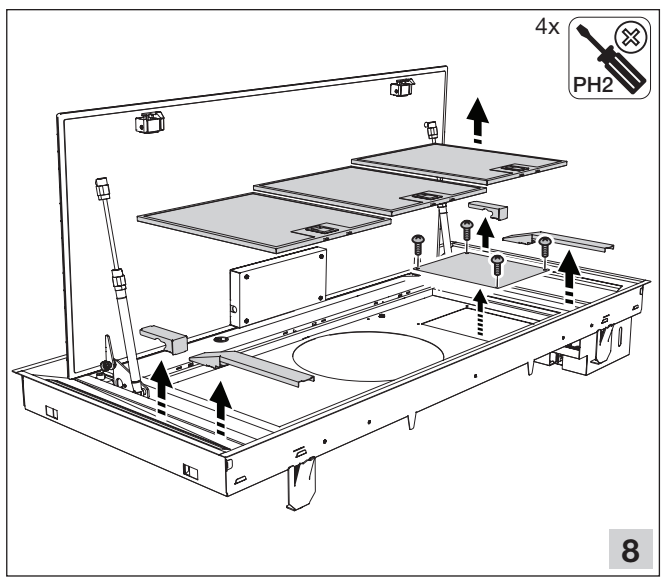

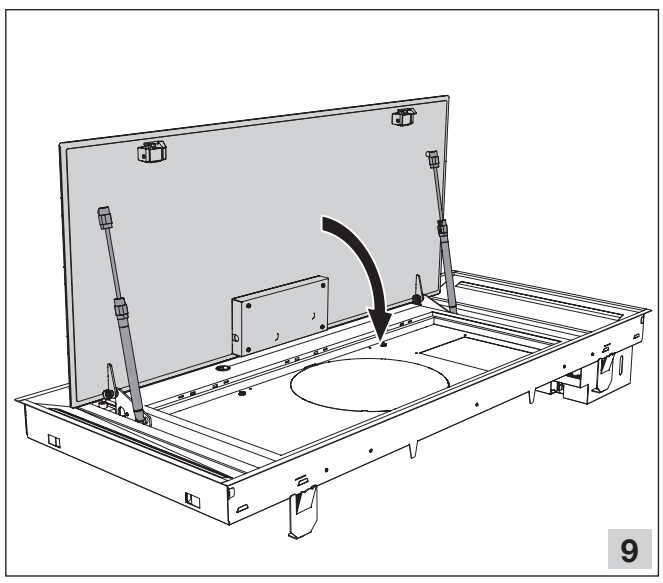

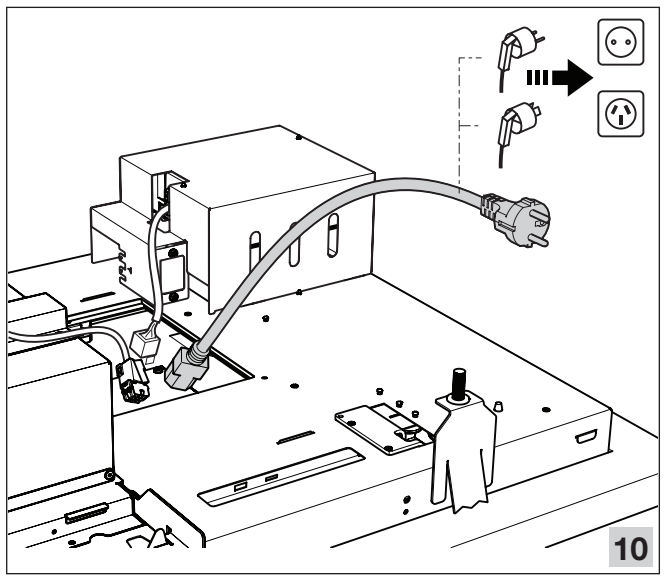
10

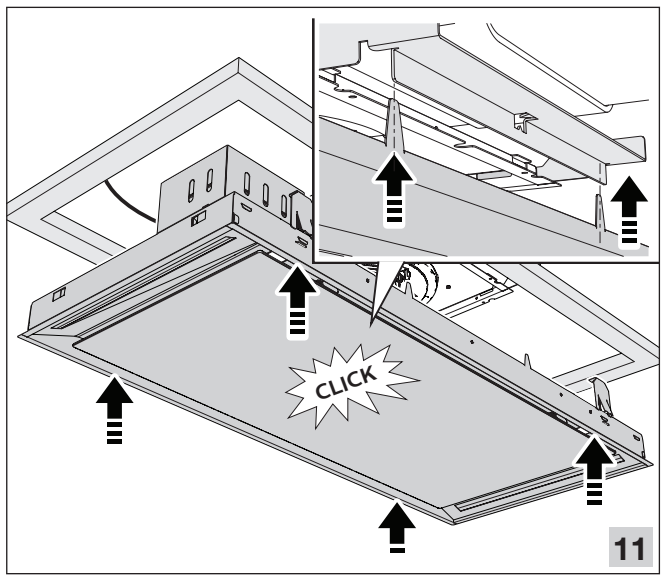
CLICK
11

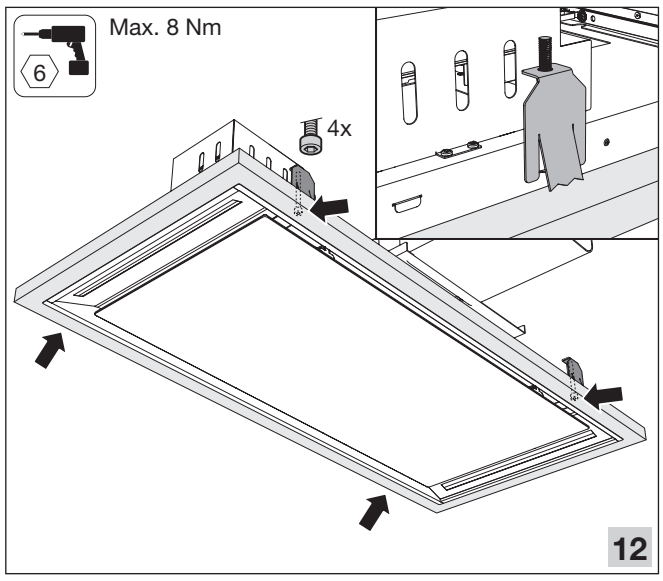
6
Max. 8 Nm
4x
12

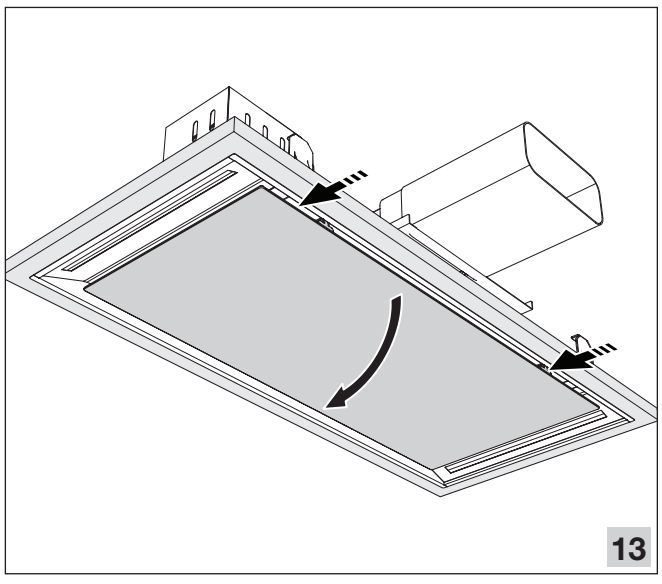
13

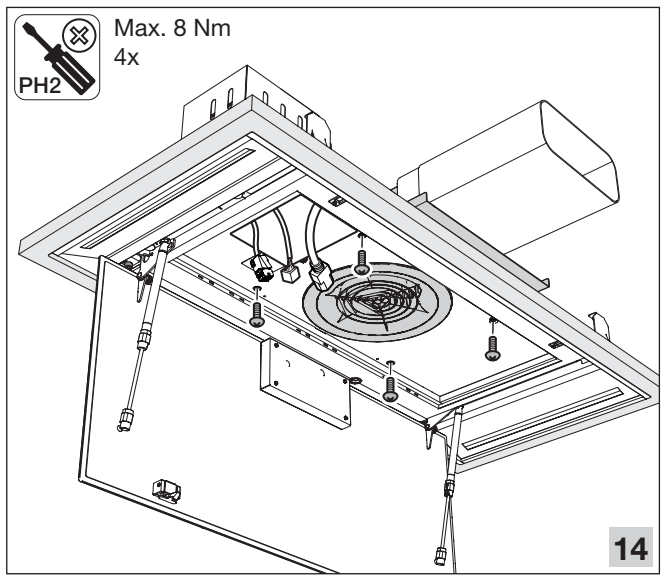
PH2
Max. 8 Nm
4x
14

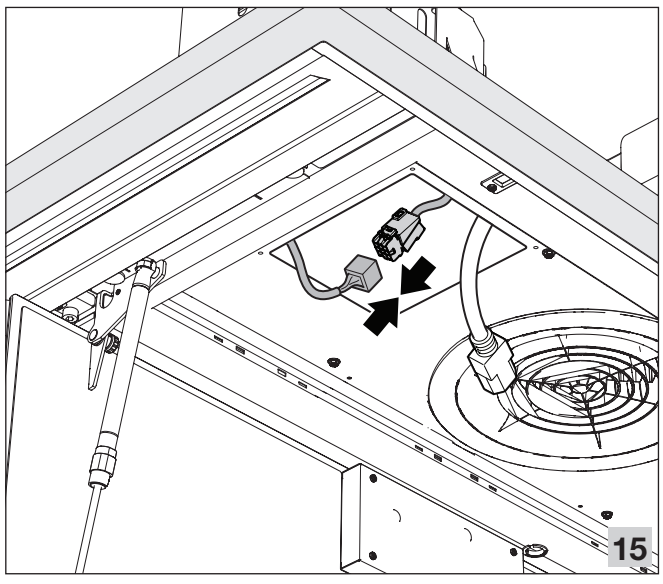
15

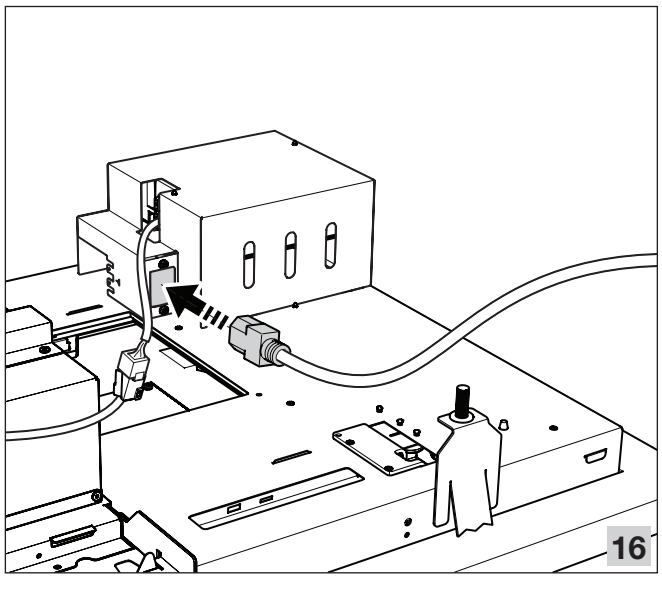
16

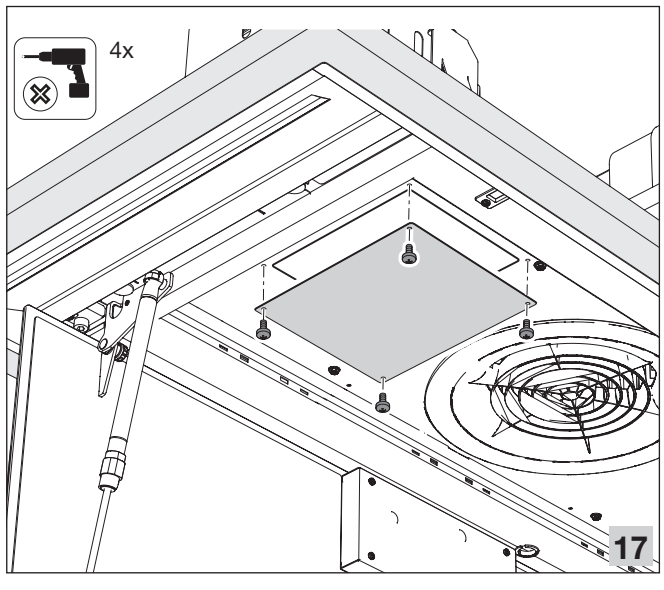
4x
17

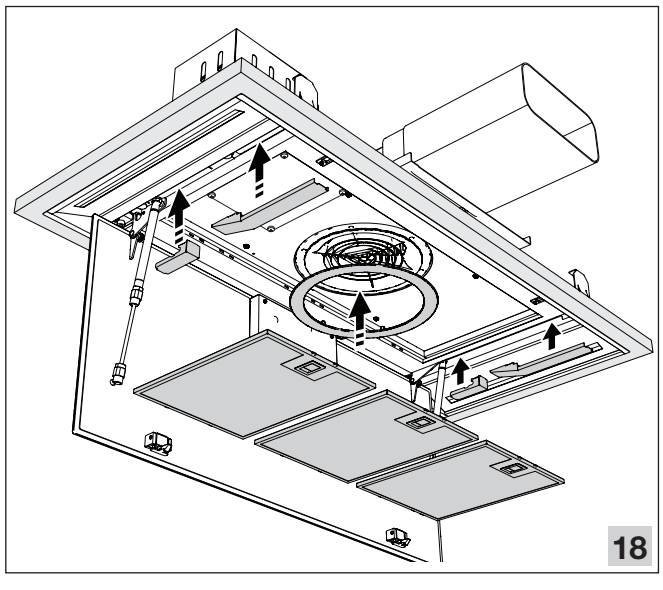
18

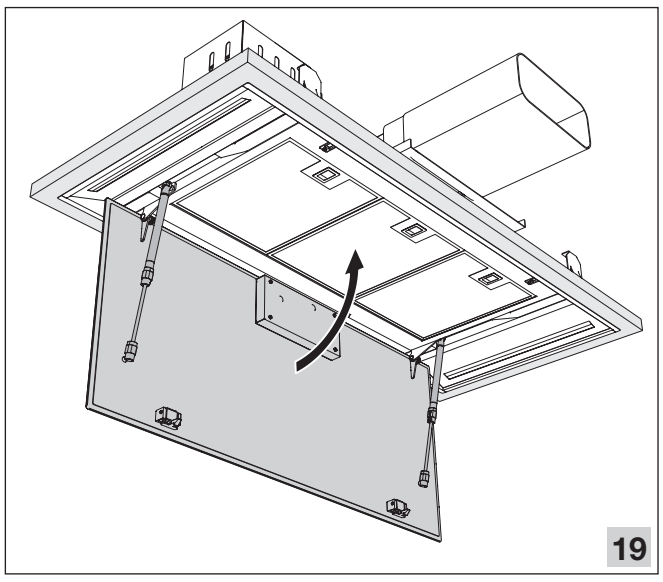
19

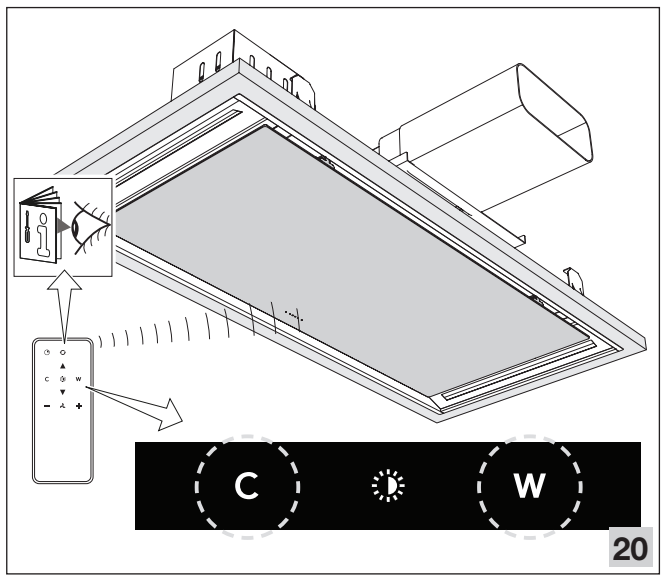
C
W
20

723236