Safety regulations

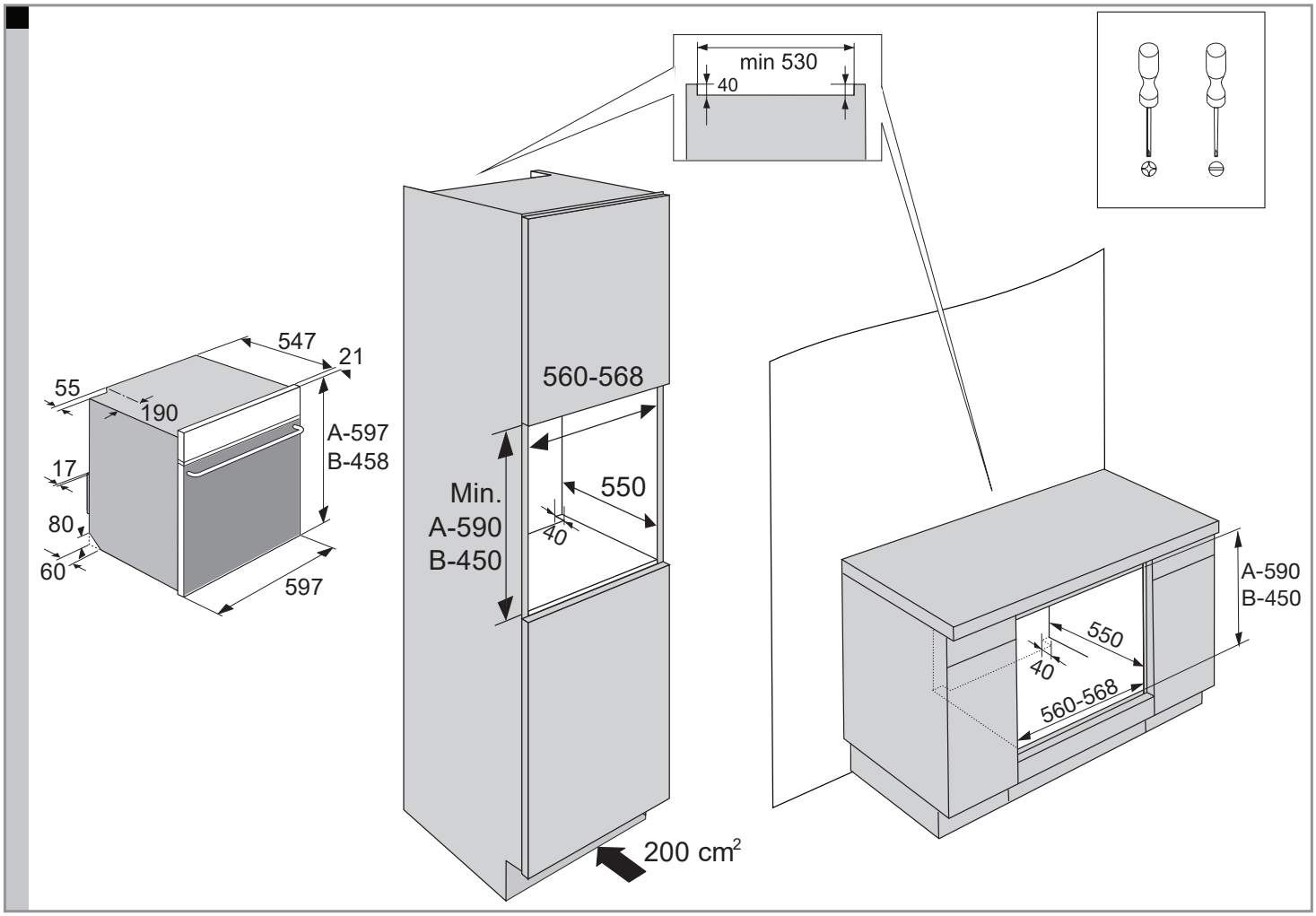
547
21
55
190
17
80
60
597
A-597
B-458
min 530
40
560-568
550
40
Min.
A-590
B-450
200 cm²
A-590
B-450
550
40
560-568

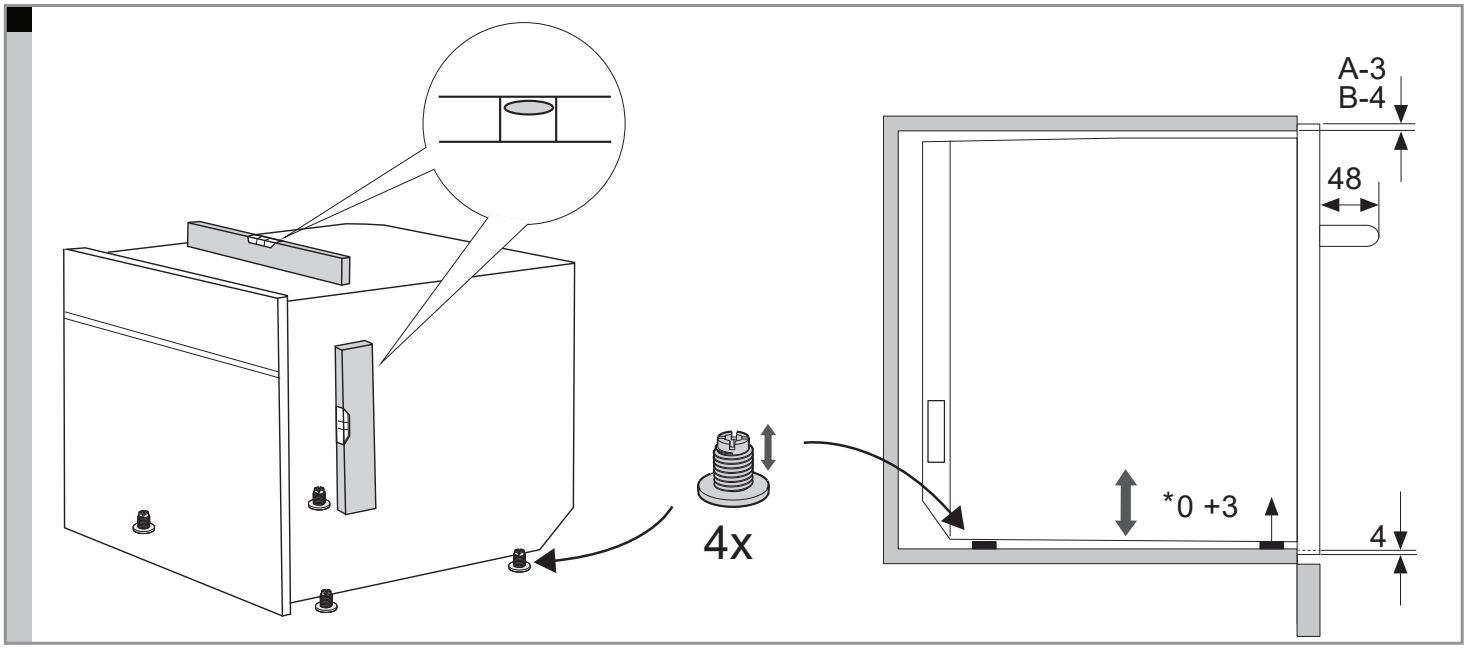
4x
A-3
B-4
48
*0 +3
4

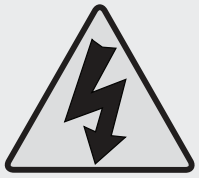

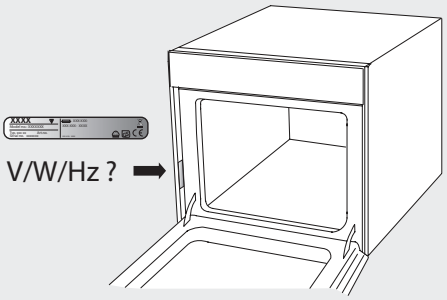

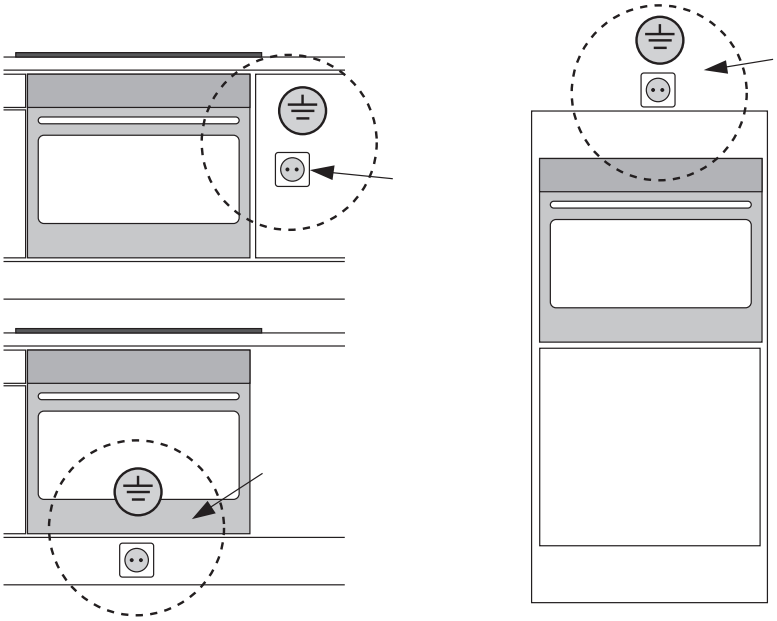

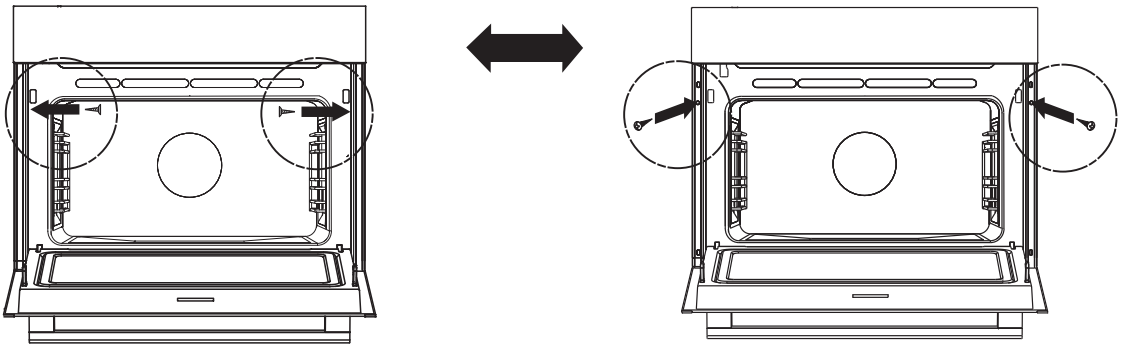

527971 / VER 7/ 11-05-2021

527971