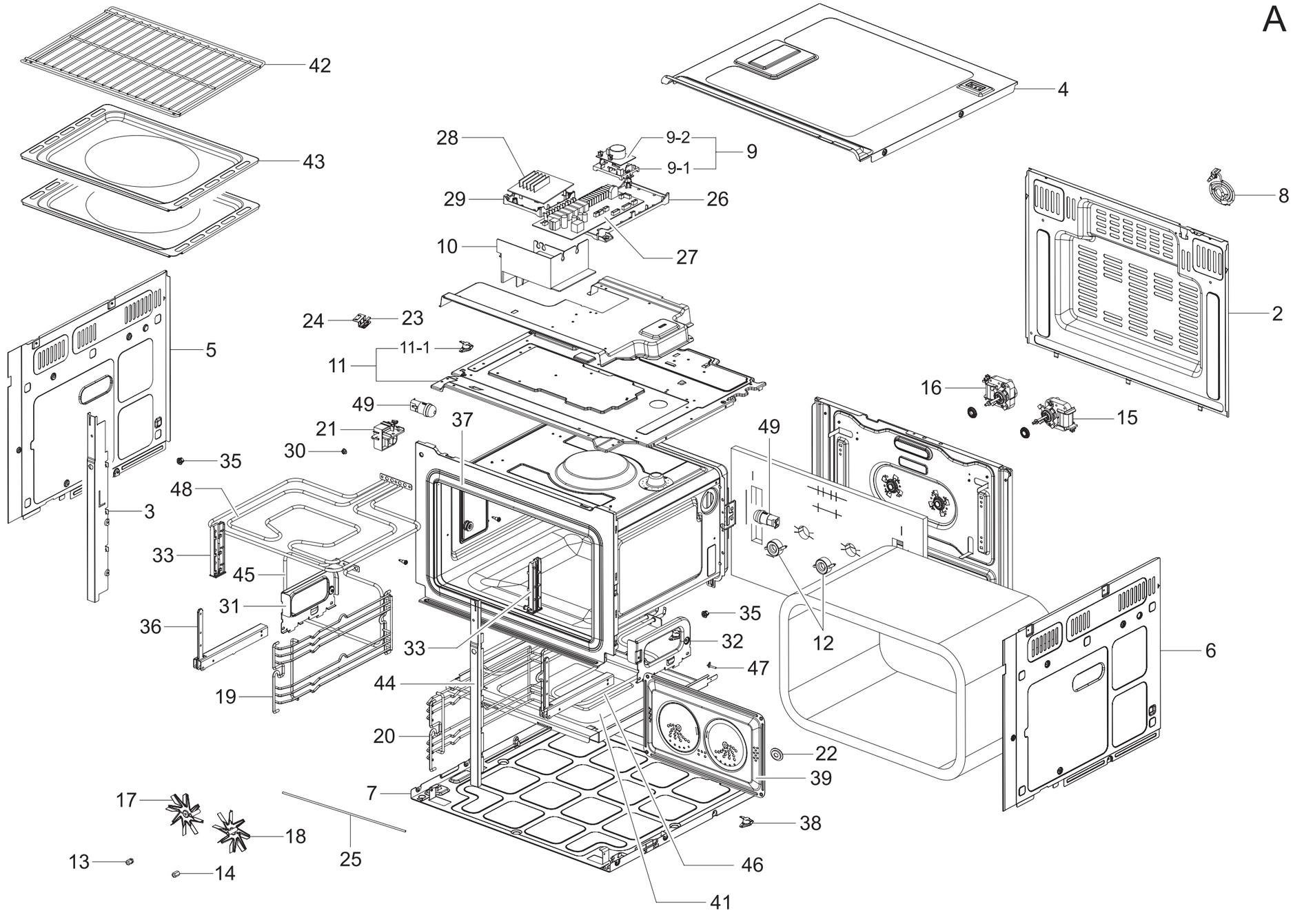
A
42
43
4
28
9-2
9
9-1
29
26
8
10
27
2
24
23
5
11-1
11
16
15
49
37
21
30
35
48
3
33
45
31
36
35
32
12
6
33
47
44
19
20
22
39
7
17
18
38
13
14
25
46
41

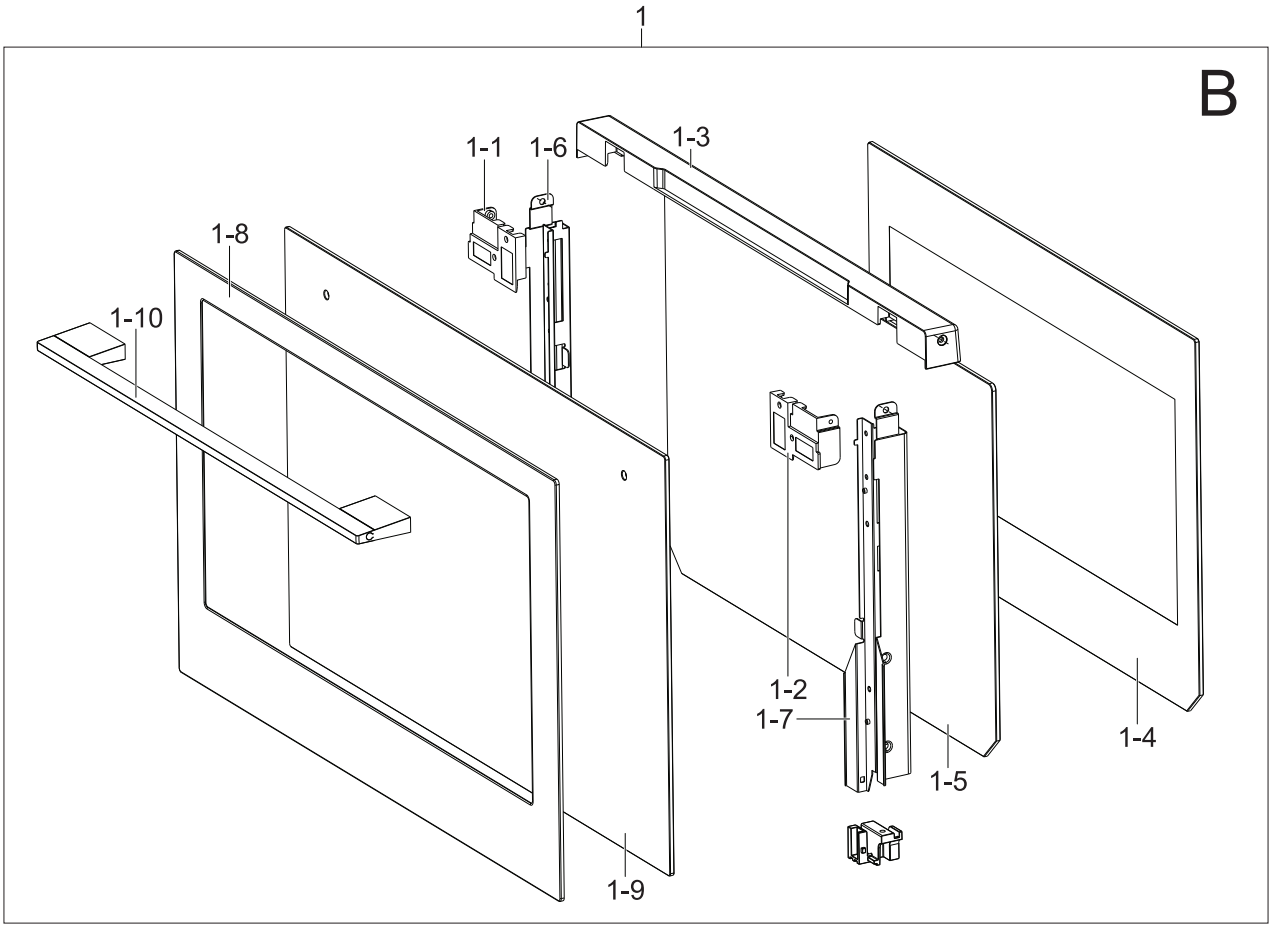
1
B
1-1
1-6
1-3
1-8
1-10
1-2
1-7
1-4
1-5
1-9

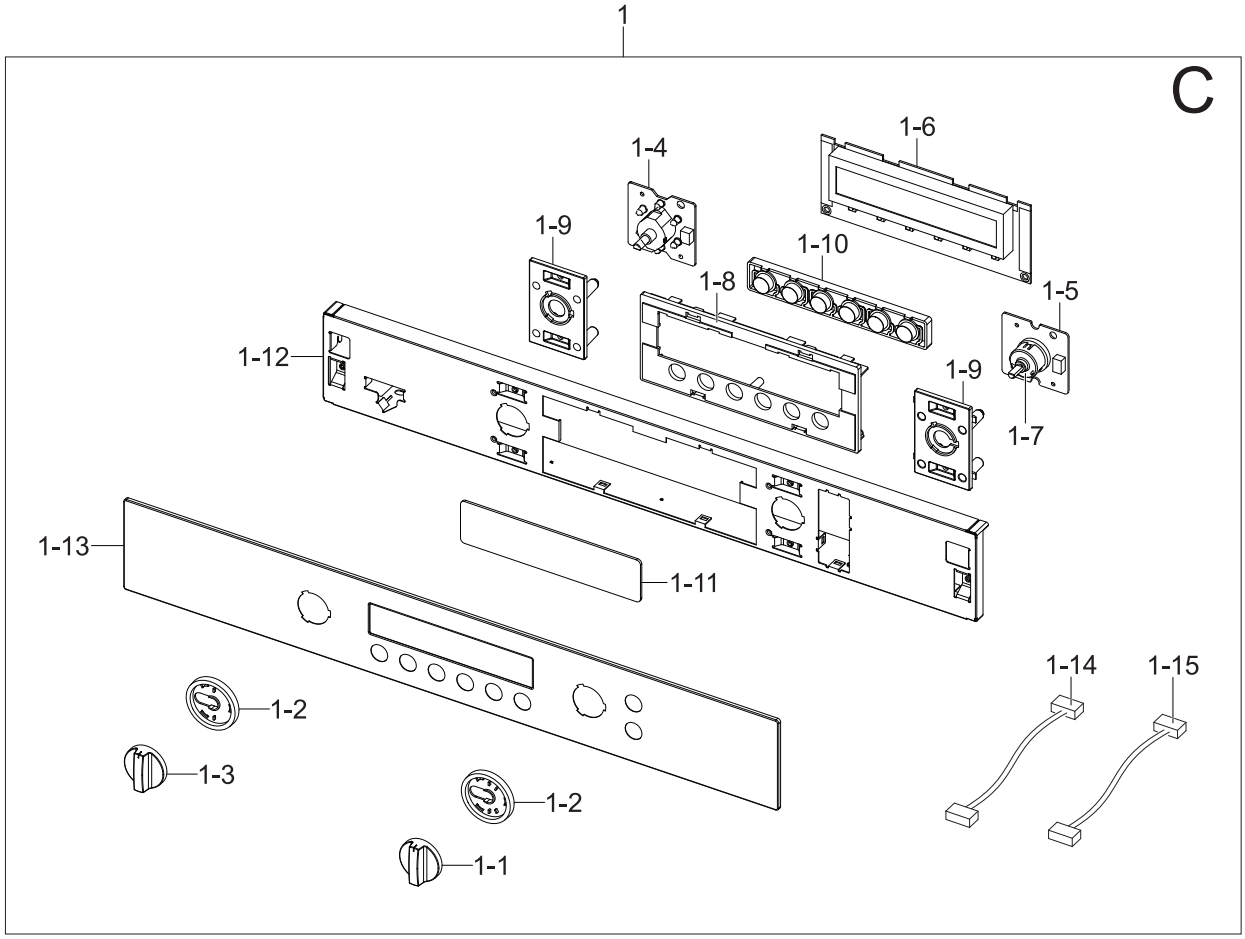
1
C
1-6
1-4
1-9
1-10
1-8
1-5
1-12
1-9
1-7
1-13
1-11
1-14
1-15
1-2
1-3
1-2
1-1