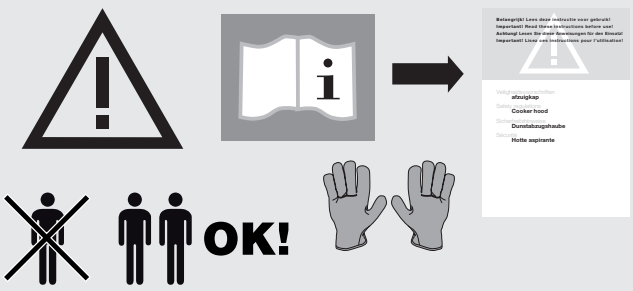

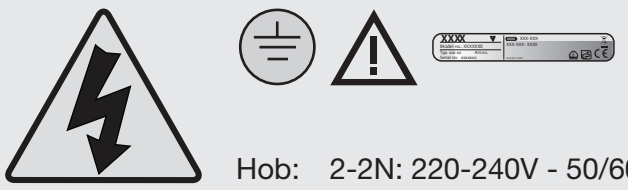

Hob: 2-2N: 220-240V - 50/60 Hz – 7.6 kW
2N: 380-415V - 50/60 Hz – 7.6 kW
1N: 220-240V - 50/60 Hz – 7.6 kW
1N: 220-240V - 50/60 Hz – 3.7 kW

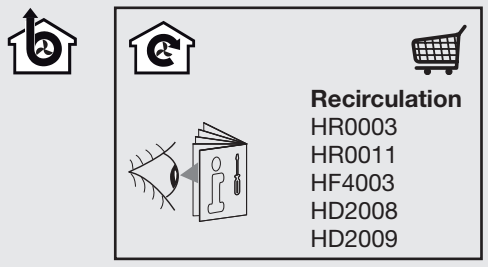

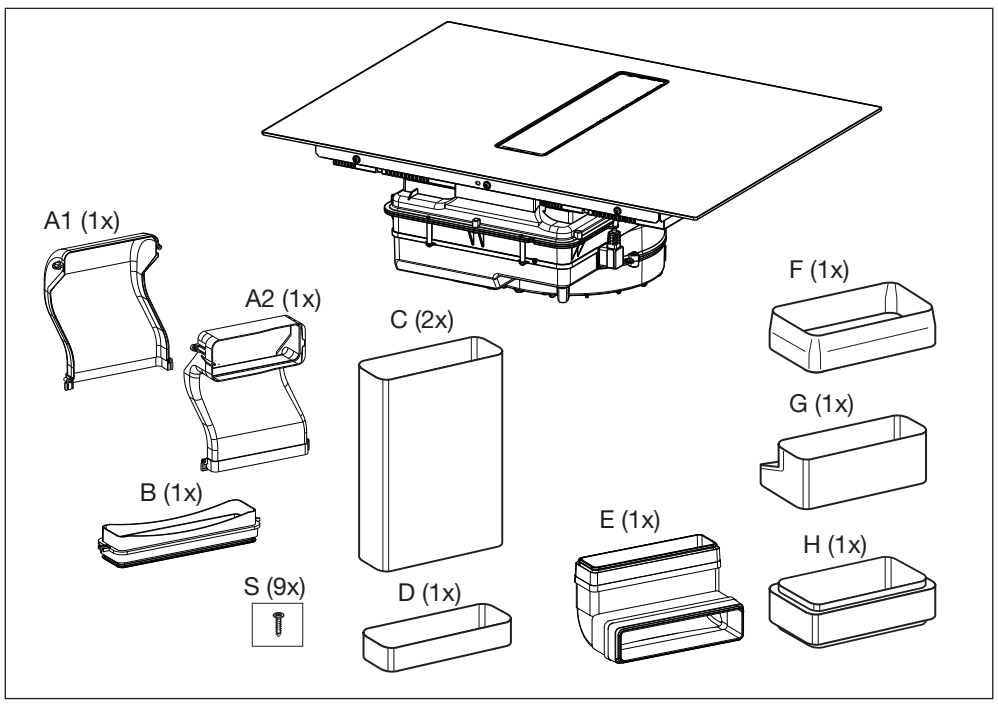

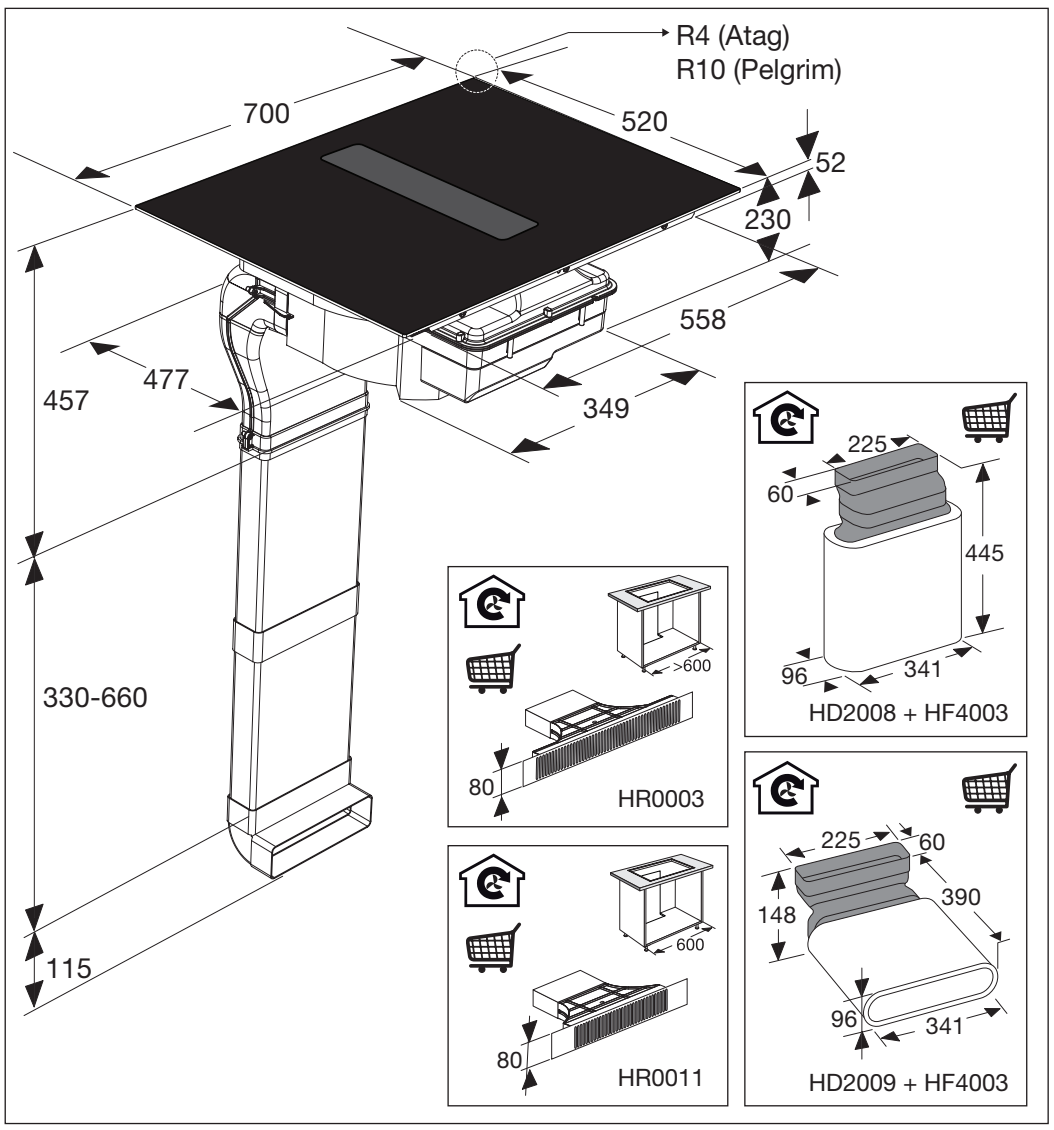

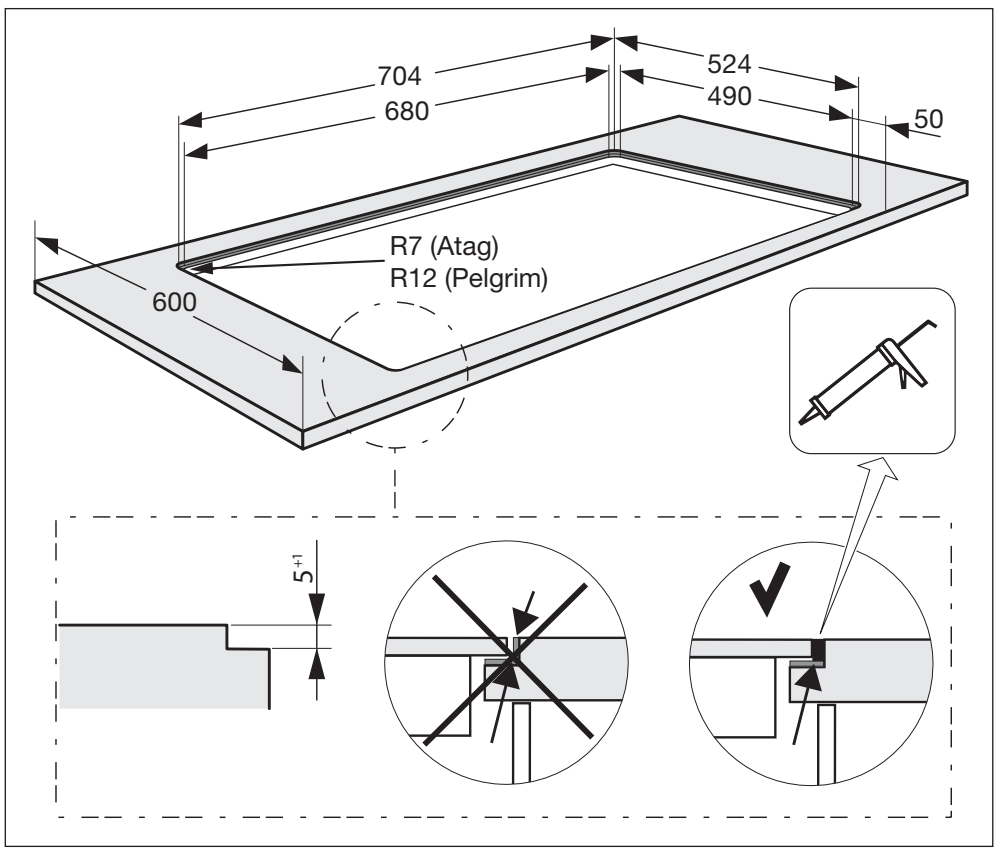

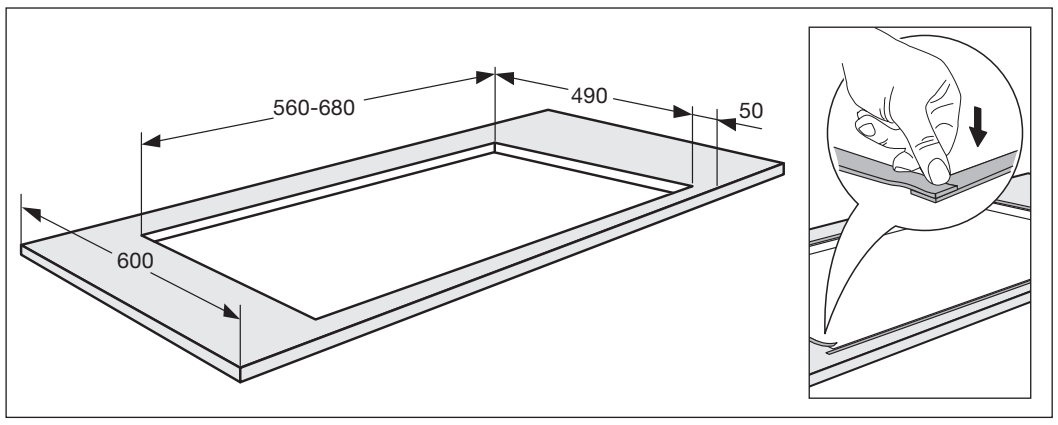

Vrije ruimte rondom toestel / Freier Raum rundum das Gerät / Free space around appliance / Espace libre autour de l'appareil

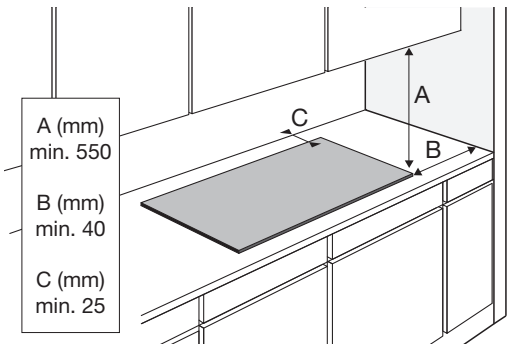

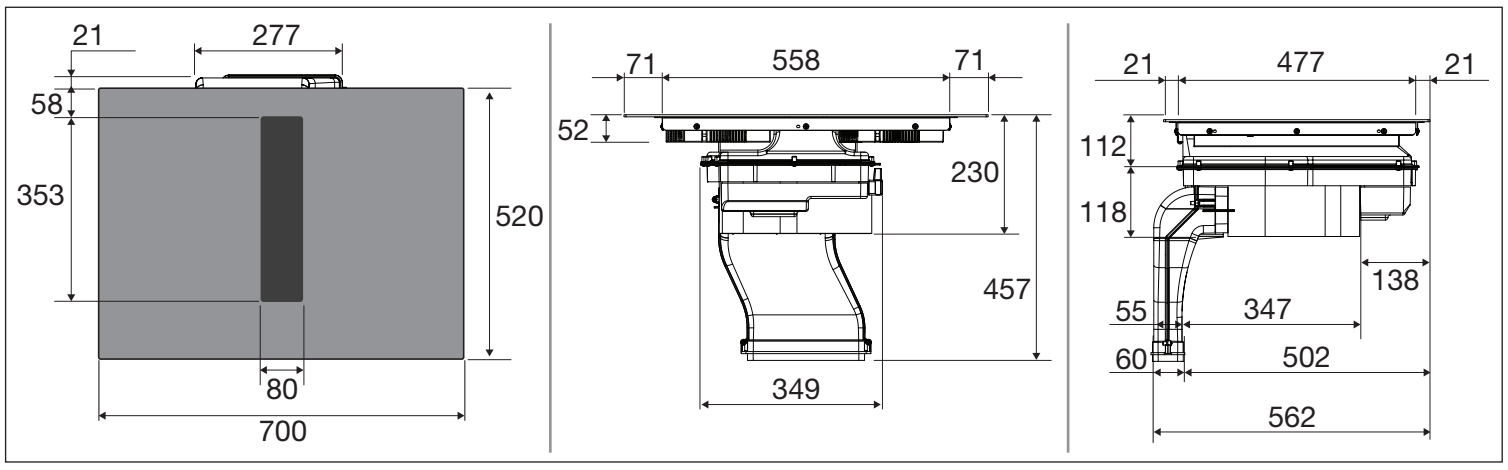

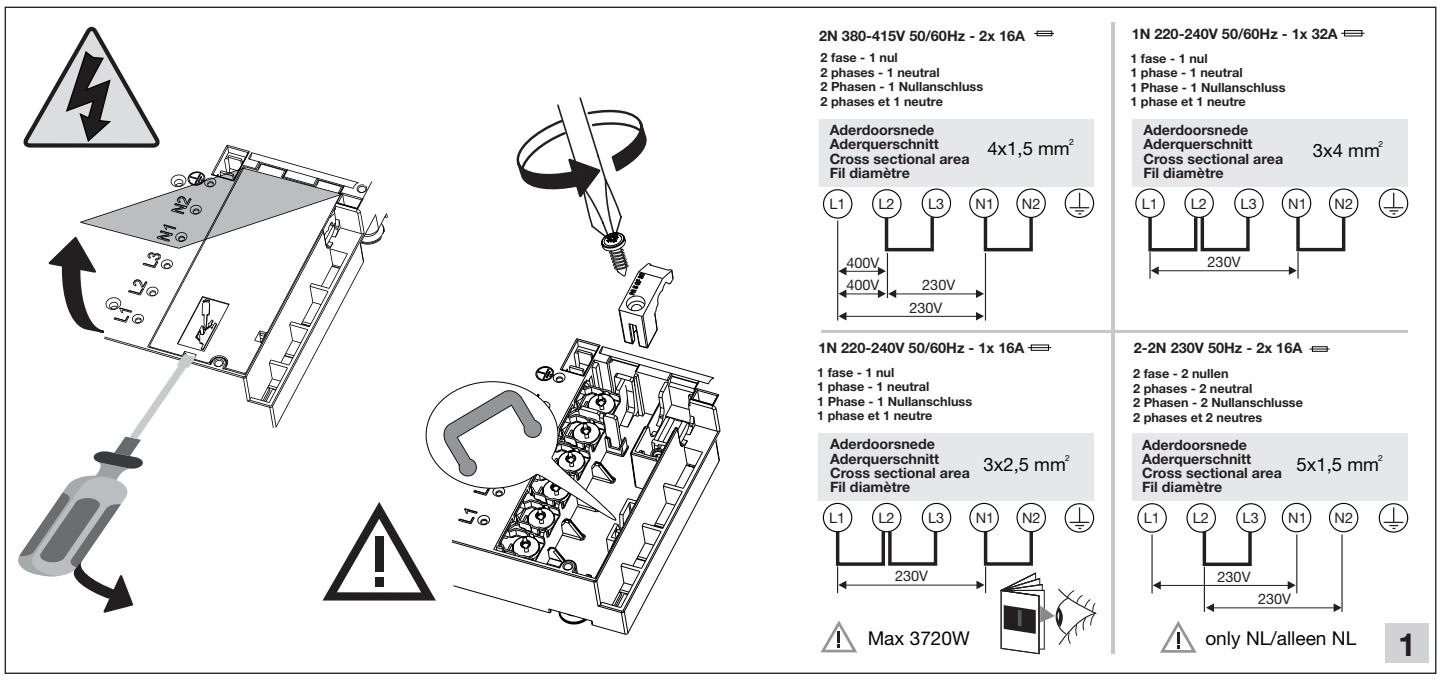

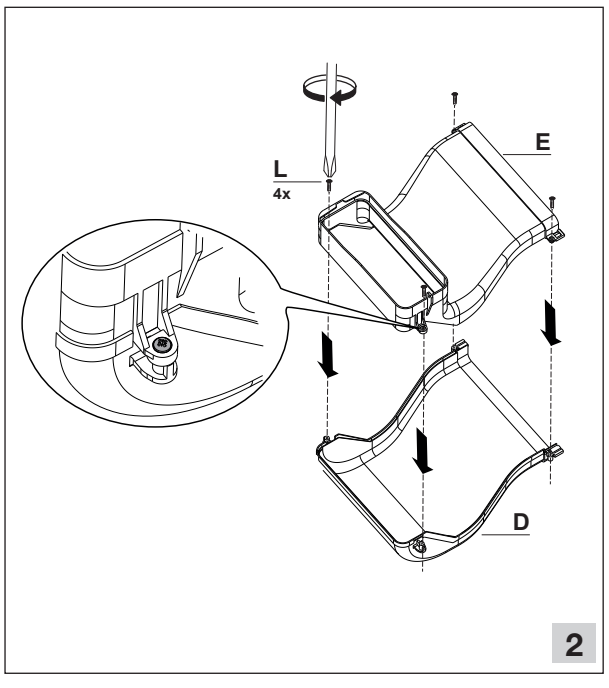

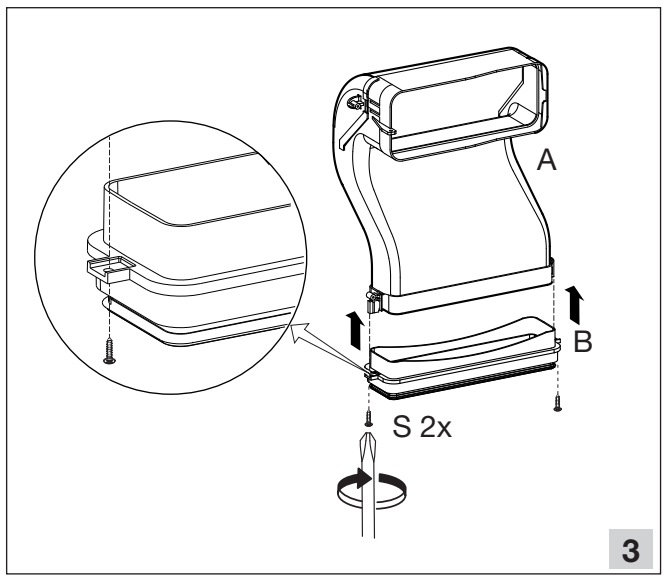
A
B
S 2x
3

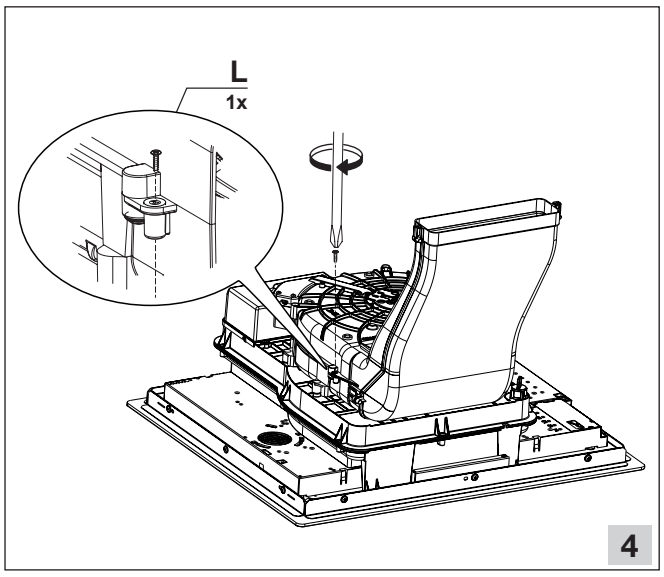
L
1x
4

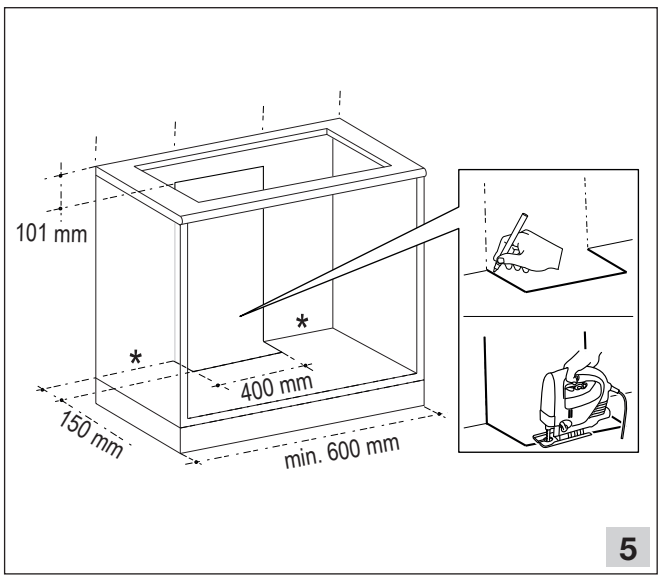
101 mm
*
*
400 mm
150 mm
min. 600 mm
5

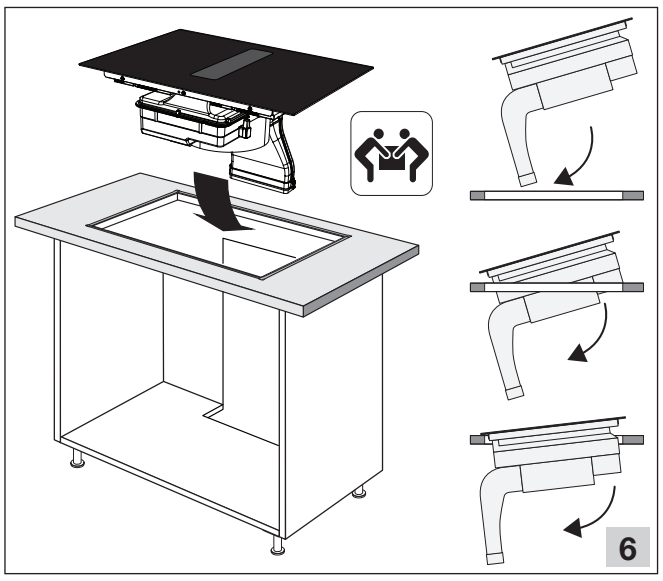
6

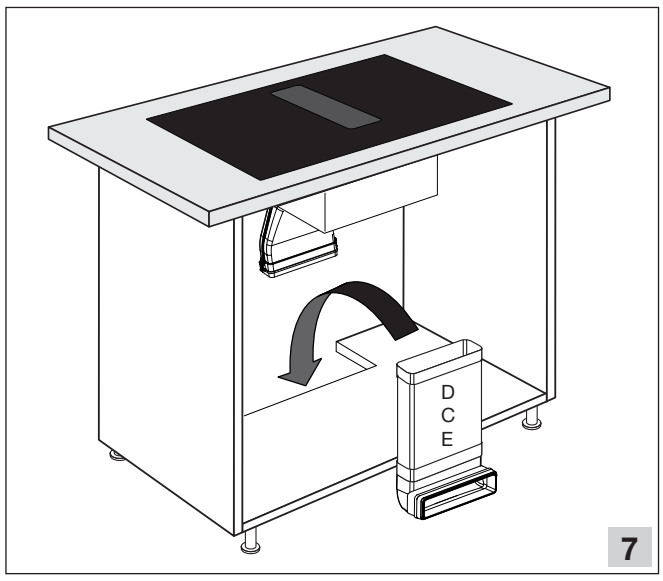
D
C
E
7

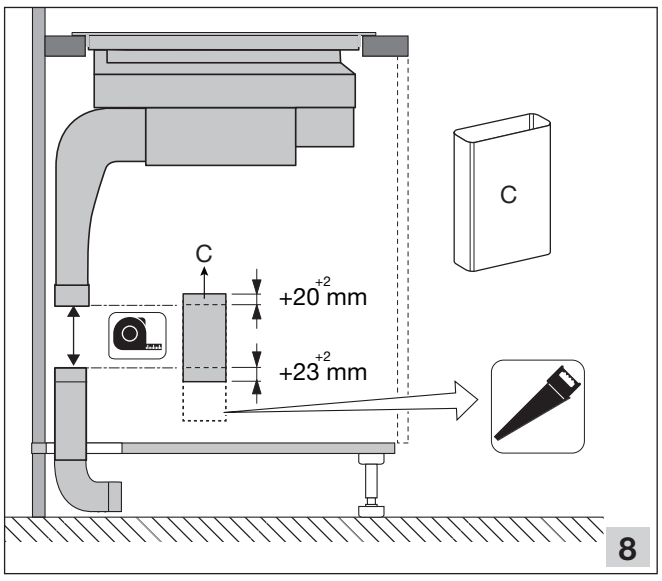
C
C
+20 mm
+23 mm
8

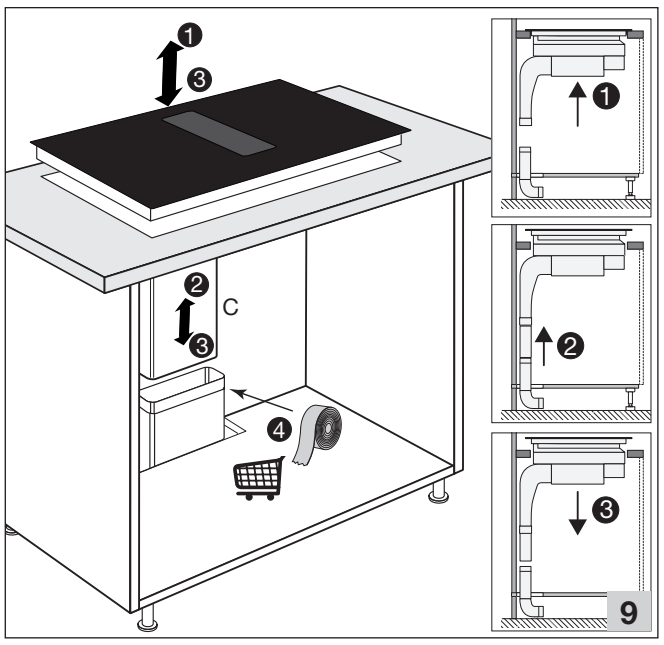
C
9

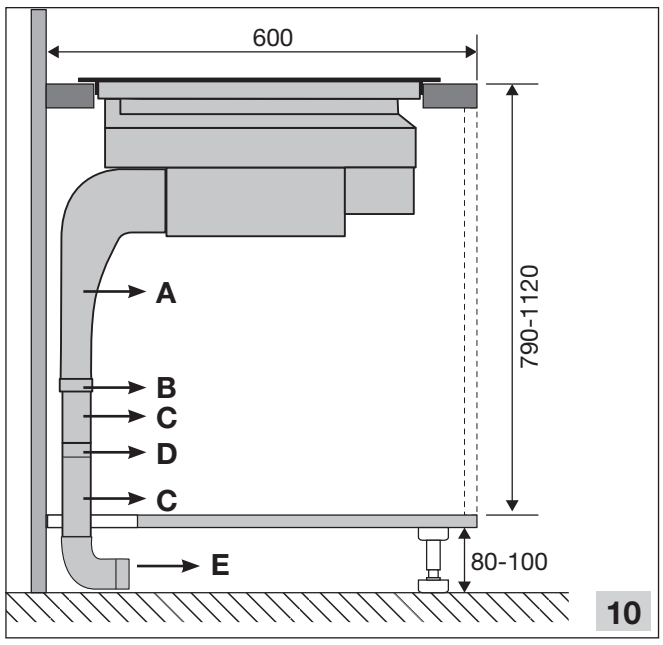
600
790-1120
A
B
C
D
C
E
80-100
10

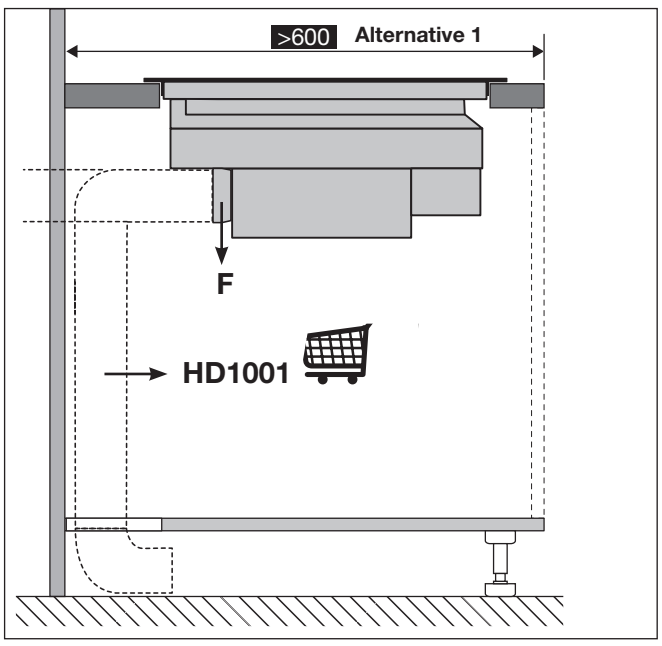
>600
Alternative 1
F
HD1001

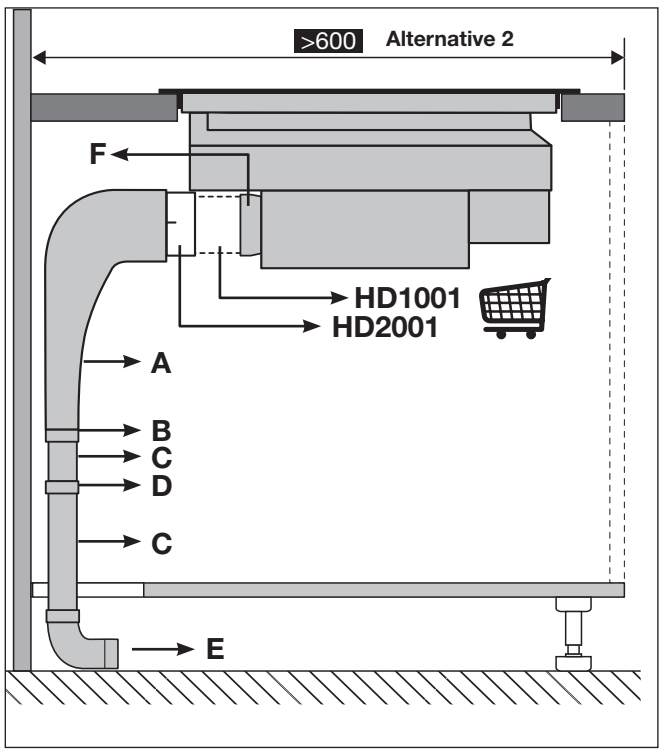
>600
Alternative 2
F
HD1001
HD2001
A
B
C
D
C
E

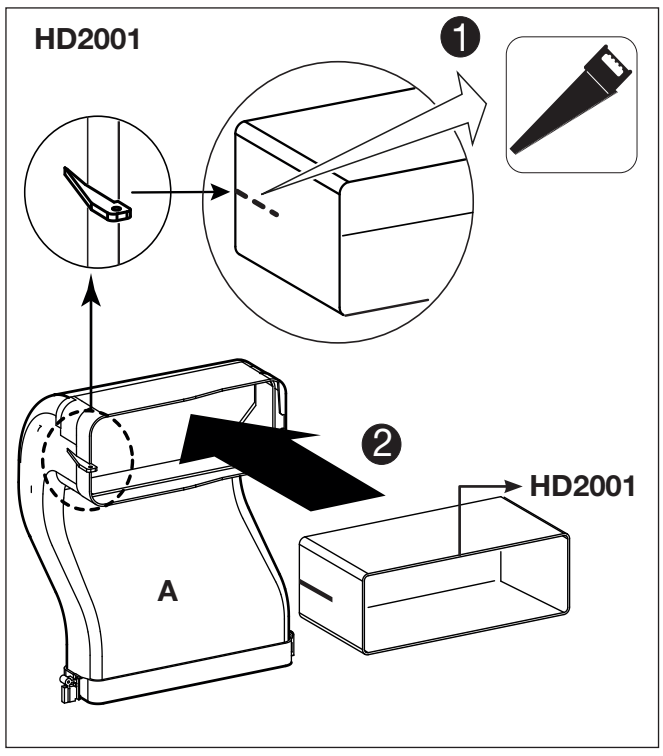
HD2001
HD2001
A

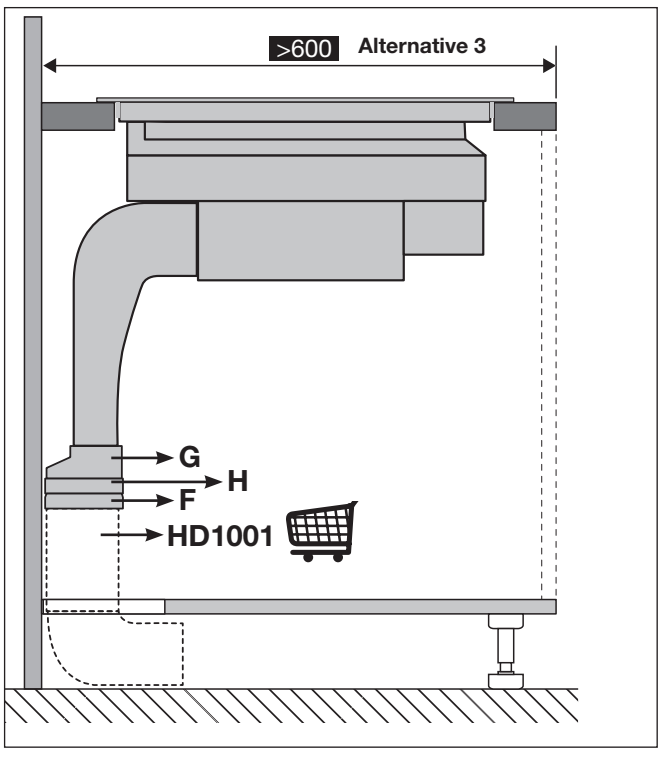
>600
Alternative 3
G
H
F
HD1001

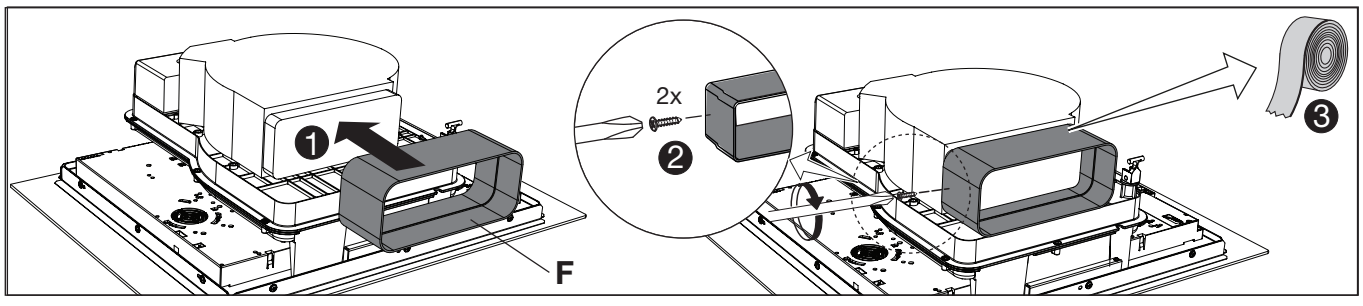
2x
F

846577