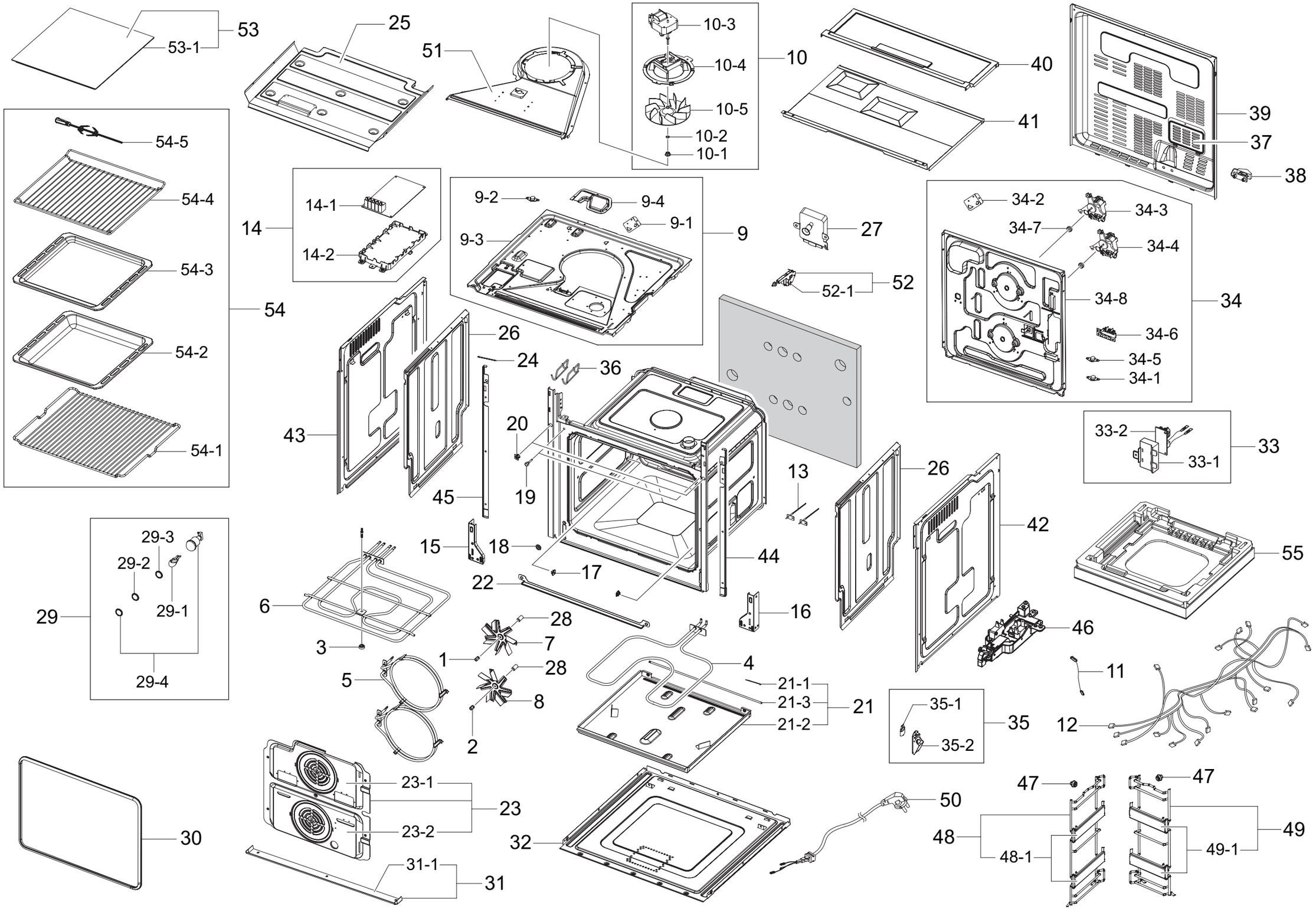
53
53-1
25
51
10
10-3
10-4
10-5
10-2
10-1
40
41
39
37
38
54
54-5
54-4
54-3
54-2
54-1
14
14-1
14-2
9
9-2
9-4
9-1
9-3
27
52
52-1
34
34-2
34-3
34-7
34-4
34-8
34-6
34-5
34-1
26
24
36
43
20
19
45
13
26
42
33
33-2
33-1
55
29
29-3
29-2
29-1
29-4
15
18
17
22
44
16
6
3
28
7
1
28
8
2
5
4
21-1
21-3
21
21-2
46
11
12
35
35-1
35-2
30
23
23-1
23-2
32
31
31-1
50
47
48
48-1
47
49
49-1

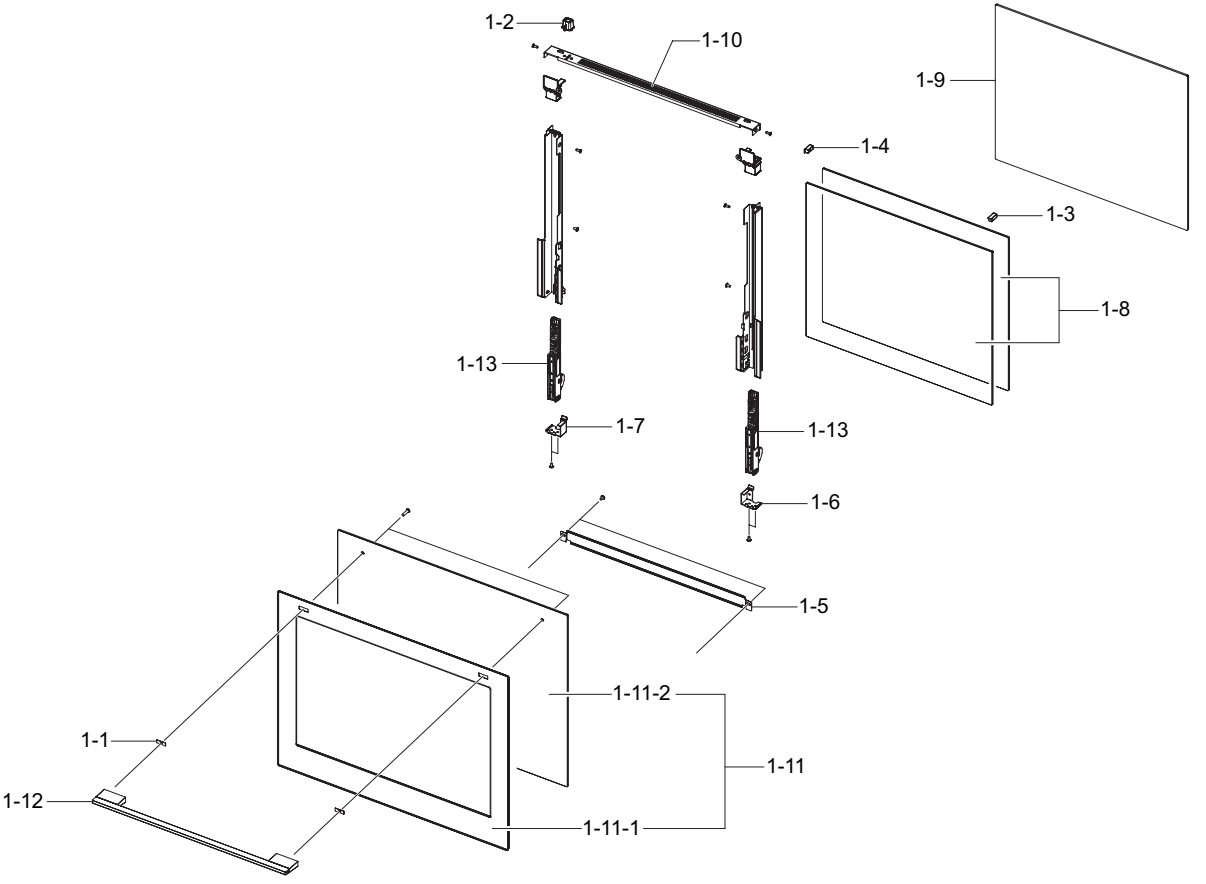
1-2
1-10
1-9
1-4
1-3
1-8
1-13
1-7
1-13
1-6
1-5
1-11-2
1-1
1-11
1-12
1-11-1

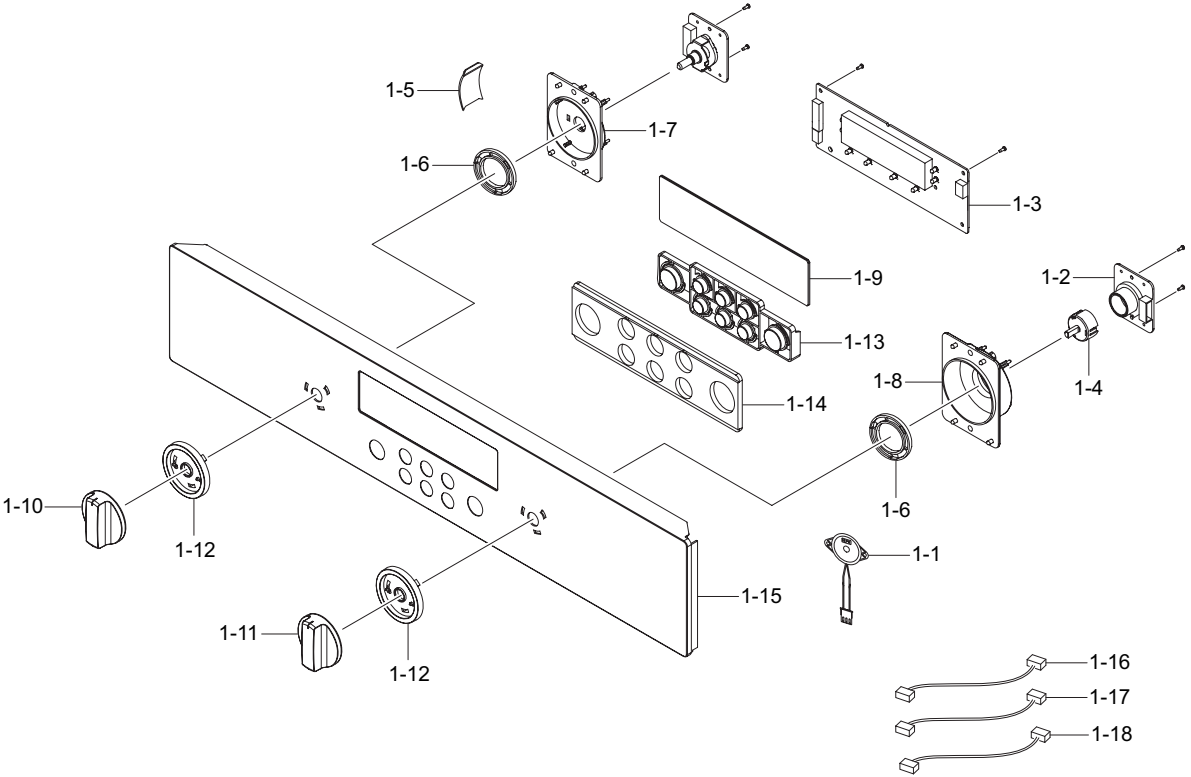
1-5
1-7
1-6
1-3
1-9
1-2
1-13
1-8
1-4
1-14
1-6
1-10
1-12
1-1
1-15
1-11
1-12
1-16
1-17
1-18