A

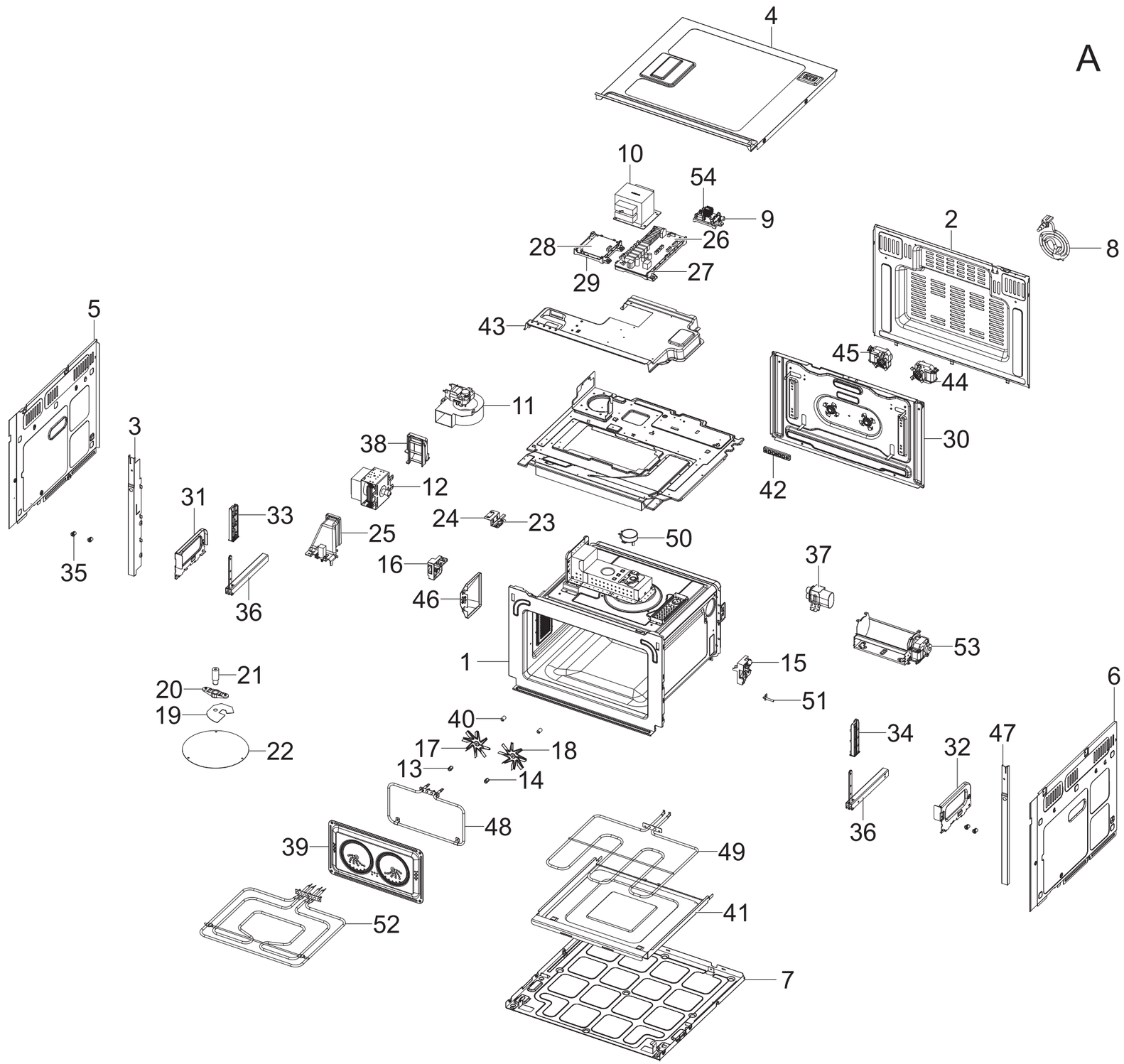
4
10
54
9
2
8
28
26
29
27
5
43
45
44
11
3
38
30
12
42
31
33
24
23
25
50
35
16
37
46
36
53
1
15
6
21
20
51
19
40
34
47
22
17
18
32
13
14
36
48
39
49
52
41
7

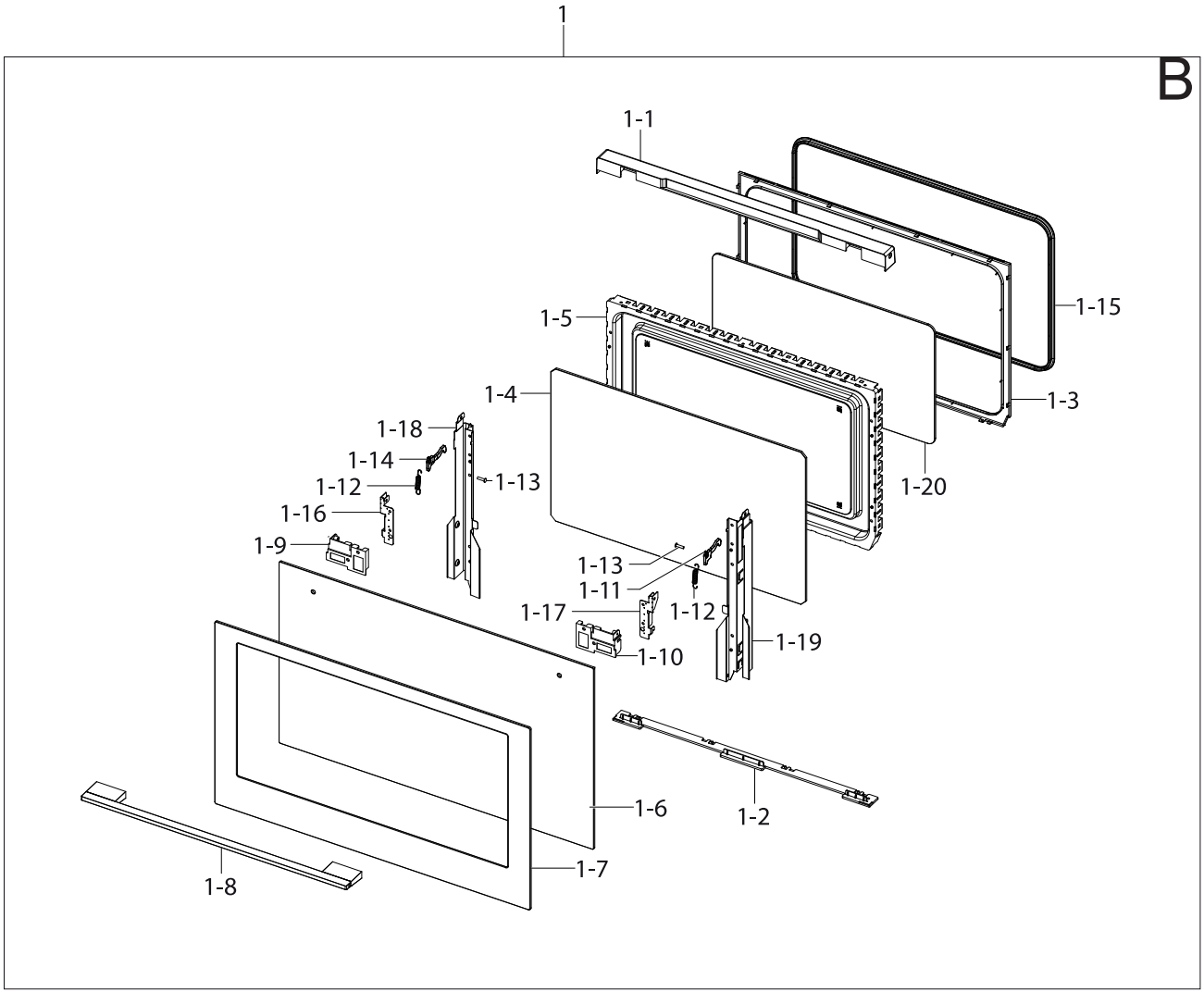
1
B
1-1
1-15
1-5
1-4
1-3
1-18
1-14
1-13
1-12
1-20
1-16
1-9
1-13
1-11
1-17
1-12
1-10
1-19
1-6
1-2
1-7
1-8

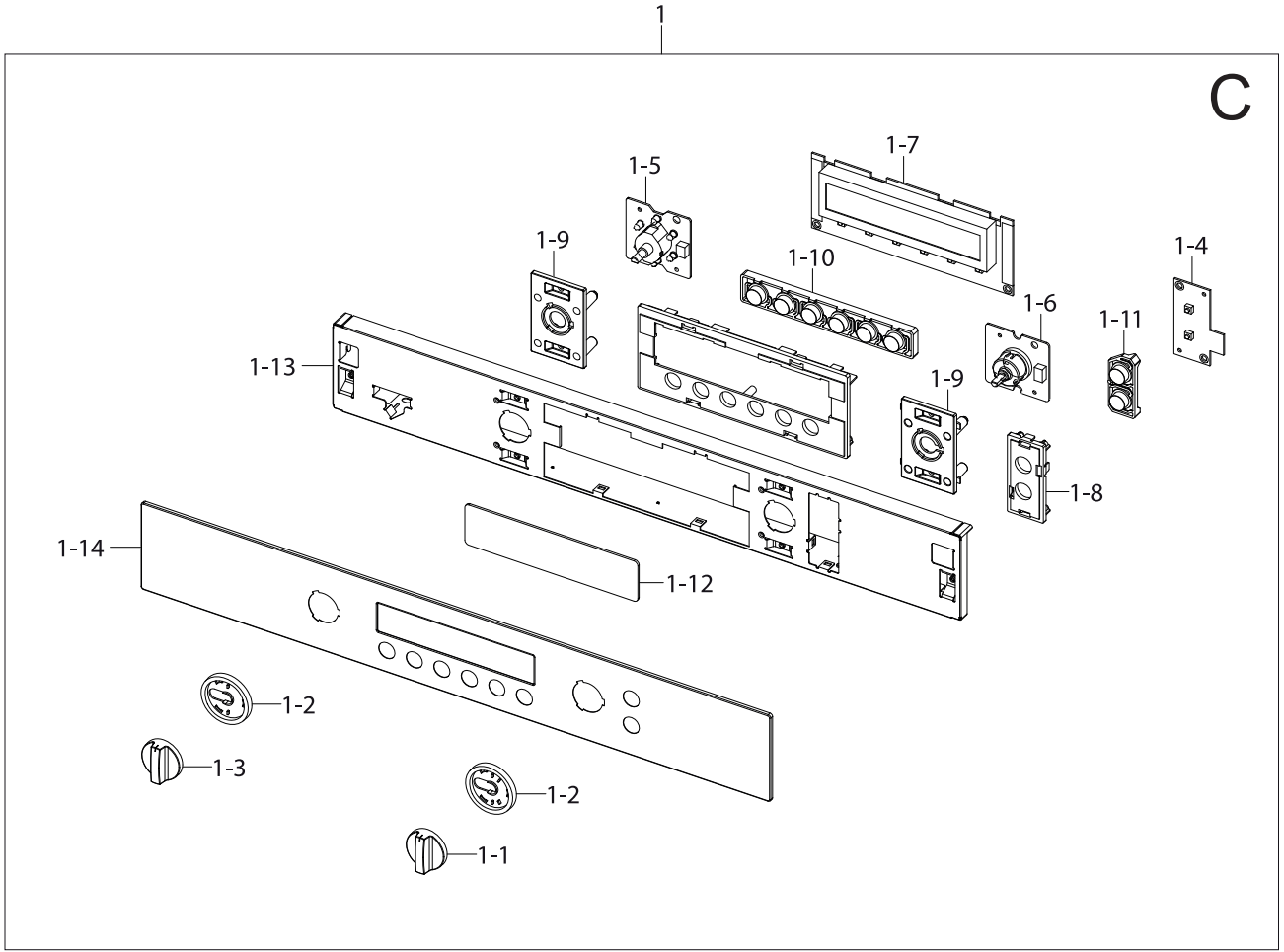
1
C
1-7
1-5
1-9
1-10
1-4
1-6
1-11
1-13
1-9
1-8
1-14
1-12
1-2
1-3
1-2
1-1