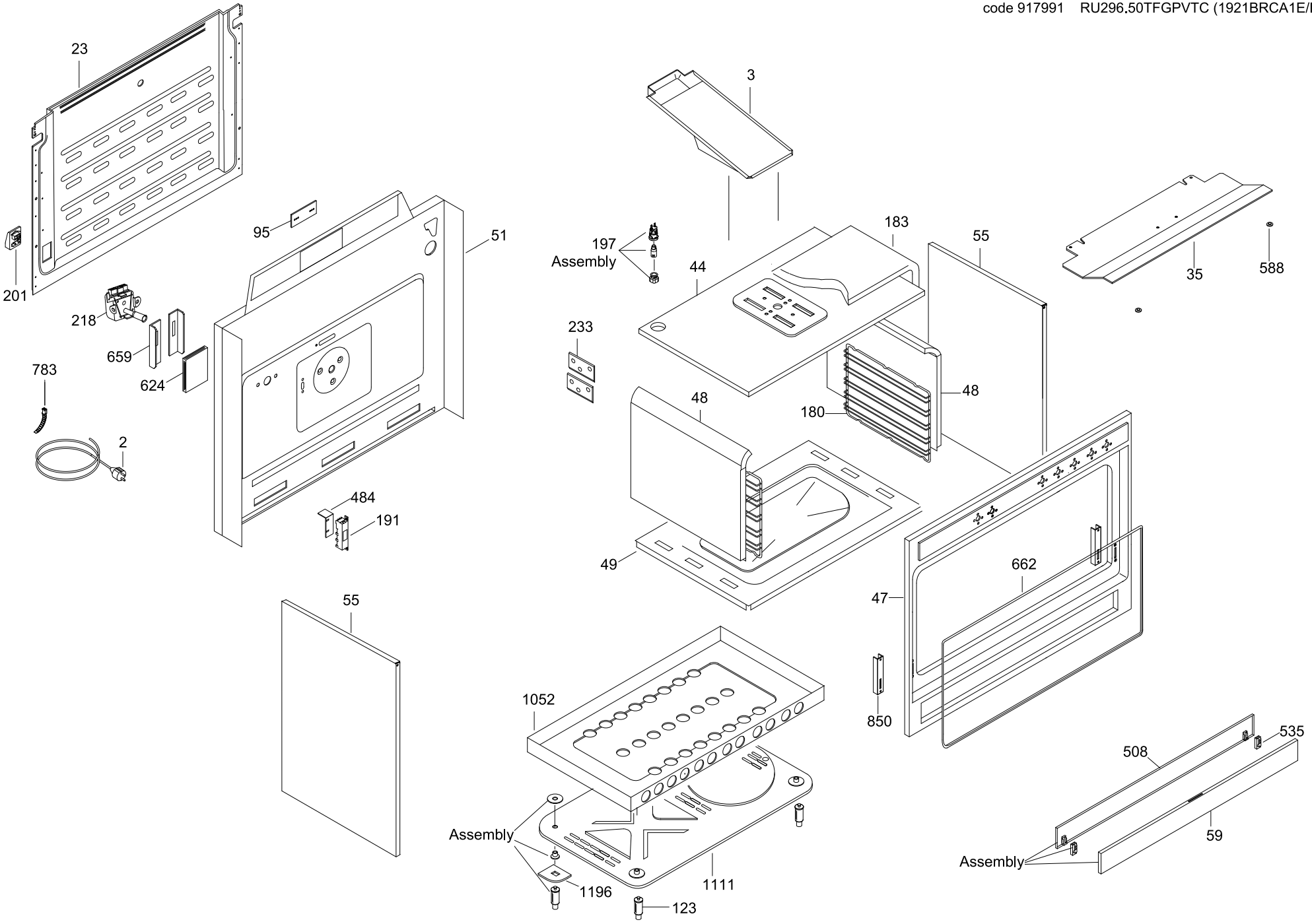
23
201
95
51
218
659
624
783
2
484
191
55
3
197
Assembly
44
183
55
233
48
180
48
49
35
588
662
47
850
1052
Assembly
1196
1111
123
508
535
59
Assembly

code 917991 RU296.50TFGPVTC (1921BRCA1E/E1)

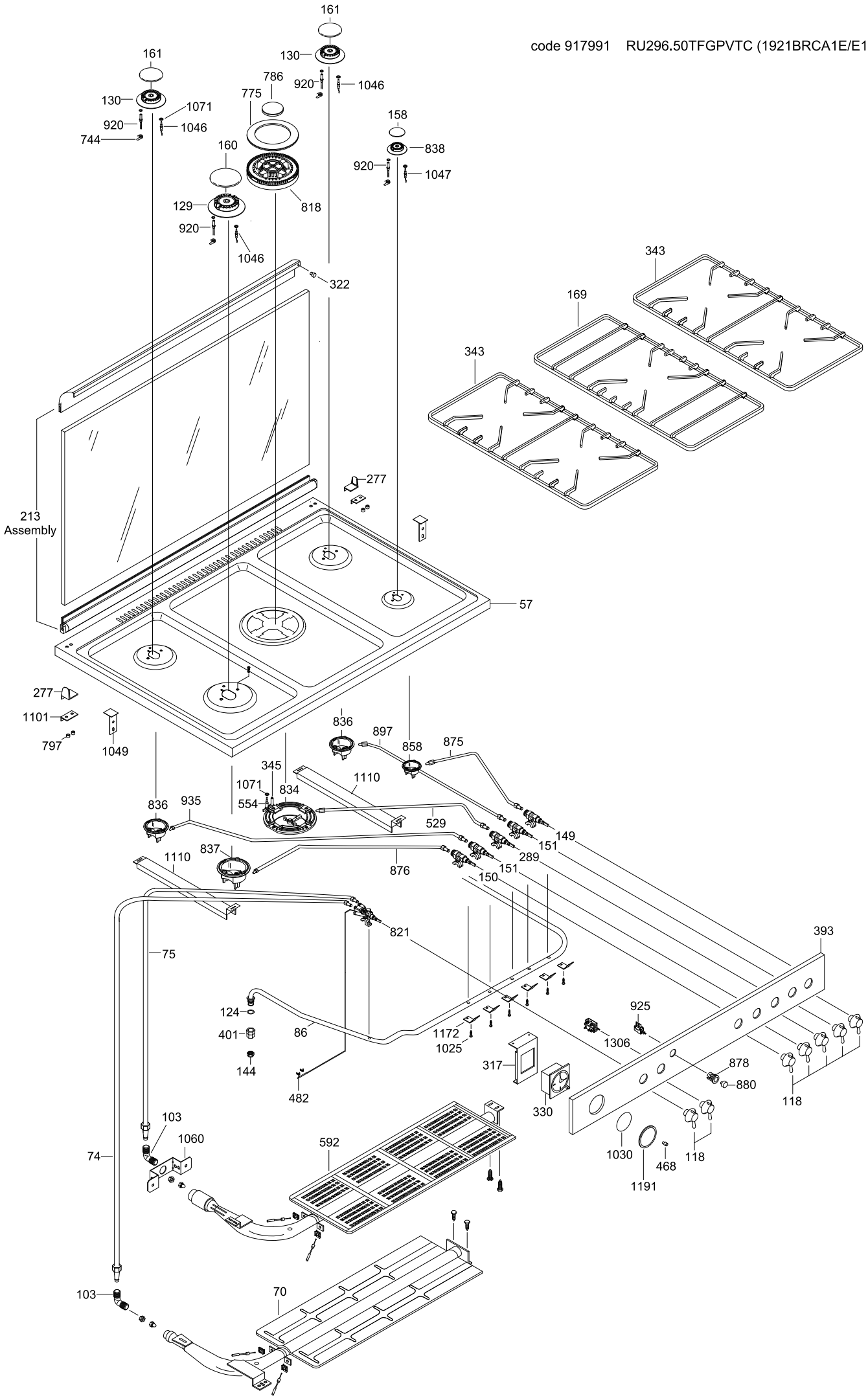

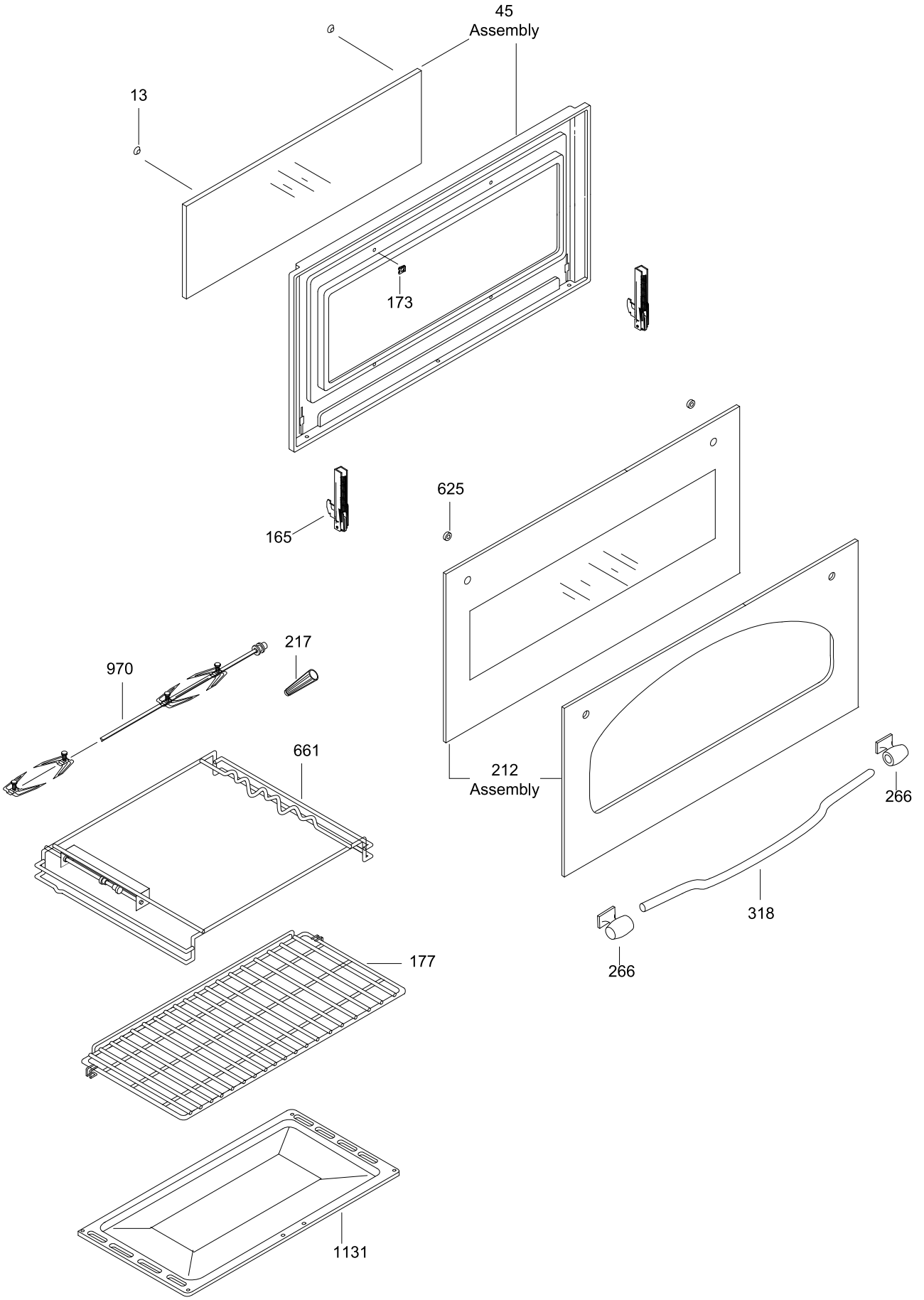
45
Assembly
13
173
165
625
217
970
661
212
Assembly
266
318
266
177
1131